Contents | Reference index | Request a quotation

INTERACTIVE PROFESSIONAL CATALOGUE

Interactive product catalogue

69 documented products, kits and ranges

ControlAccessPro



KBILL4024



BUFFALO160 OTI



BILL30M

Open detailed product sheets, manufacturer documents and a quotation request.

Browse families | View the brand online

Contents

Complete gate kits p. 7

Sliding gate operators p. 34

Swing gate operators p. 45

Sectional and industrial doors p. 56

Rising barriers p. 63

Controls and radio p. 69

ControlAccessPro

View all references

Reference index

KBILL4024	KBILL4024 swing gate kit	p. 7
KBILL40M	KBILL40M swing gate kit	p. 8
KBILL50M	KBILL50M swing gate kit	p. 9
KBOB2124.DK	KBOB2124.DK swing gate kit	p. 10
KBOB3024E.DK	KBOB3024E.DK swing gate kit	p. 11
KBOB30M	KBOB30M swing gate kit	p. 12
KBOB30ME.B	KBOB30ME.B swing gate kit	p. 13
KBULL424SE	KBULL424SE sliding gate kit	p. 14
KBULL424SW	KBULL424SW sliding gate kit	p. 15
KBULL624SE	KBULL624SE sliding gate kit	p. 16
KBULL624SW	KBULL624SW sliding gate kit	p. 17
KBULL624 TURBO	KBULL624 TURBO sliding gate kit	p. 18
KBULL6MLT SE	KBULL6MLT SE sliding gate kit	p. 19
KBULL6M SE.S	KBULL6M SE.S sliding gate kit	p. 20
KBULL8M	KBULL8M sliding gate kit	p. 21
KBULL8OM	KBULL8OM sliding gate kit	p. 22
KPR	KPR swing gate kit	p. 23
KPR24.B	KPR24.B swing gate kit	p. 24
KPRE.B	KPRE.B swing gate kit	p. 25
KSAM	KSAM swing gate kit	p. 26
KSAM PLUS	KSAM PLUS swing gate kit	p. 27
KTOM3024E	KTOM3024E swing gate kit	p. 28

ControlAccessPro

Reference index

KTOM30M	KTOM30M swing gate kit	p. 29
KTOM30ME.B	KTOM30ME.B swing gate kit	p. 30
KTOM4024E	KTOM4024E swing gate kit	p. 31
KTOM40M	KTOM40M swing gate kit	p. 32
KVN.M20ESW	KVN.M20ESW industrial door kit	p. 33
BUFFALO160 OTI	BUFFALO160 OTI · heavy-duty industrial sliding gate operator	p. 34
BULL10M.S	BULL10M.S · Sliding gate operator	p. 35
BULL1224 TURBO.S	BULL1224 TURBO.S · Sliding gate operator	p. 36
BULL15M	BULL15M · shared-access sliding gate operator	p. 37
BULL17 OMI	BULL17 OMI · Sliding gate operator	p. 38
BULL20 HE	BULL20 HE · industrial sliding gate operator	p. 39
BULL624SE.S	BULL624SE.S · sliding gate operator with magnetic limits	p. 40
BULL624 TURBO	BULL624 TURBO · fast sliding gate operator	p. 41
BULL6M SE.S	BULL6M SE.S · Sliding gate operator	p. 42
BULL8M	BULL8M · 230 V sliding gate operator	p. 43
BULL8 OM	BULL8 OM · Sliding gate operator	p. 44
BILL30M	BILL30M · residential swing gate actuator	p. 45
BILL4024	BILL4024 · Swing gate operator	p. 46
BILL50M	BILL50M · long-stroke swing gate actuator	p. 47
BOB3024E	BOB3024E · Swing gate operator	p. 48
BOB30M	BOB30M · self-locking swing gate actuator	p. 49
BOB50M	BOB50M · long-leaf swing gate actuator	p. 50

ControlAccessPro

Reference index

DU.350FX	DU.350FX · underground swing gate operator	p. 51
DU.IT14NE	DU.IT14NE · Swing gate operator	p. 52
PR.45E24	PR.45E24 · Swing gate operator	p. 53
SAM.E24	SAM.E24 · Swing gate operator	p. 54
SAM.E24 PLUS	SAM.E24 PLUS · Swing gate operator	p. 55
JACK24.50	JACK24.50 · 50 Nm side-mounted operator	p. 56
JACK24.80	JACK24.80 · 80 Nm side-mounted operator	p. 57
JM.3ESA TURBO	JM.3ESA TURBO · fast sectional door operator	p. 58
JM.4ESA	JM.4ESA · Door operator	p. 59
VN.M20	VN.M20 · Door operator	p. 60
VN.S20 ESW	VN.S20 ESW · Door operator	p. 61
VN.S20 UP	VN.S20 UP · industrial door operator with control unit	p. 62
DIVA.3	DIVA.3 · Automatic boom barrier	p. 63
DIVA.5	DIVA.5 · Automatic boom barrier	p. 64
EVA.5	EVA.5 · rising barrier up to 5 m	p. 65
EVA.7	EVA.7 · rising barrier up to 7 m	p. 66
EVA.8	EVA.8 · Automatic boom barrier	p. 67
LADY	LADY · rising barrier up to 4 m	p. 68
BRAINY24 PLUS	BRAINY24 PLUS · Control unit	p. 69
BRAINY PLUS	BRAINY PLUS · Control unit	p. 70
HEADY	HEADY · Control unit	p. 71
IRI.TX4VA	IRI.TX4VA · Radio transmitter	p. 72

ControlAccessPro

Reference index

ONE.2WB	ONE.2WB · Radio receiver	p. 73
TO.GO2VA	TO.GO2VA · two-channel transmitter	p. 74
TO.GO4VA	TO.GO4VA · Radio transmitter	p. 75

ControlAccessPro

COMPLETE GATE KITS

KBILL4024

KBILL4024 swing gate kit



Beninca photo of the BILL4024 operator · the other kit components are not shown.

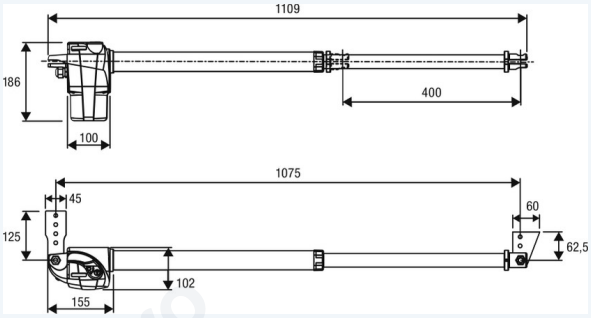

Manufacturer drawing of the BILL4024 operator included in the kit.

Price on request

Beninca kit for a two-leaf swing gate with the BILL4024.

Kit: 2 × Swing gate operator. (BILL4024) · 1 × 24 Vdc control unit. (TRUST24) · 1 × Pair of adjustable photocells. (PUPILLA.T) · 1 × Warning light with integrated aerial. (STAR) · 1 × Two-channel transmitter, 433.92 MHz. (TO.GO2VA)

- Beninca order code: 959003993.
- Motor supply: 24 Vdc.
- Maximum thrust: 2000 N.
- Opening time: 15”.
- Duty cycle: intensive use.
- Protection rating: IP54.

Manufacturer documents

Manufacturer product sheet · FR

Included TO.GO2VA transmitter · operating instructions

Associated operator product specifications

Official kit product page

Included TO.GO2VA transmitter · operating instructions

Beninca instructions portal · sign-in required

View the full product sheet | Request a quotation

COMPLETE GATE KITS

KBILL40M

KBILL40M swing gate kit



Beninca photo of the BILL40M operator · the other kit components are not shown.

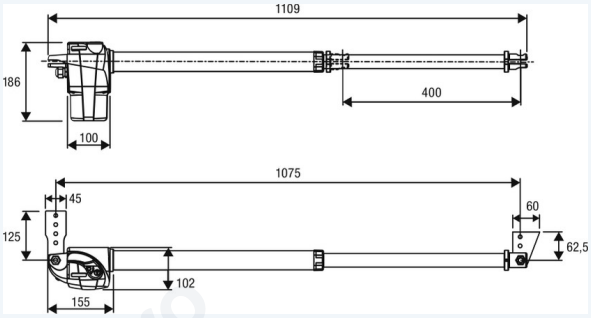

Manufacturer drawing of the BILL40M operator included in the kit.

Price on request

Beninca kit for a two-leaf swing gate with the BILL40M.

Kit: 2 × Swing gate operator. (BILL40M) · 1 × 230 Vac control unit. (HEADY) · 1 × Pair of adjustable photocells. (PUPILLA.T) · 1 × Warning light with integrated aerial. (STAR) · 1 × Two-channel transmitter, 433.92 MHz. (TO.GO2VA)

- Beninca order code: 9592190.
- Motor supply: 230 Vac (50-60Hz).
- Maximum thrust: 2800 N.
- Opening time: 18”.
- Duty cycle: 30%.
- Protection rating: IP54.

Manufacturer documents

Manufacturer product sheet · FR

Included TO.GO2VA transmitter · operating instructions

Associated operator product specifications

Official kit product page

Included TO.GO2VA transmitter · operating instructions

Beninca instructions portal · sign-in required

View the full product sheet | Request a quotation

Contents | Reference index | Request a quotation

COMPLETE GATE KITS

KBILL50M

KBILL50M swing gate kit



Kit operator shown. See the contents or confirm the version in the quotation.

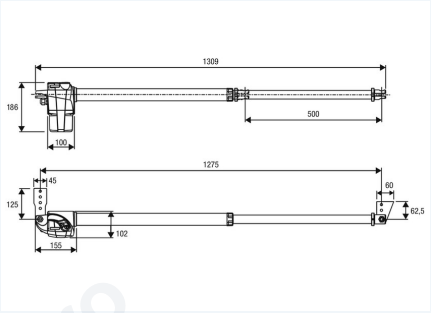

Manufacturer dimensional drawing of the BILL50M operator included in the kit.

€1,664.39 excl. VAT

Manufacturer kit in the supplied Beninca sheet, identified by order code 9592191.

Kit: 2 × 230 Vac actuators. (BILL50M) · 1 × Control unit. (HEADY) · 1 × Pair of photocells. (PUPILLA.F) · 1 × Warning light with antenna. (LAMPI.LED) · 1 × Key switch. (TOKEY) · 1 × Two-channel transmitter. (TO.GO2WV)

- 2 × 230 Vac BILL50M actuators and HEADY controller.
- PUPILLA.F, LAMPI.LED, TOKEY and TO.GO2WV in the documented edition.

Manufacturer documents

Included operator product page

Included operator product page

View the full product sheet | Request a quotation

COMPLETE GATE KITS

KBOB2124.DK

KBOB2124.DK swing gate kit



Beninca photo of the BOB2124.DK operator · the other kit components are not shown.

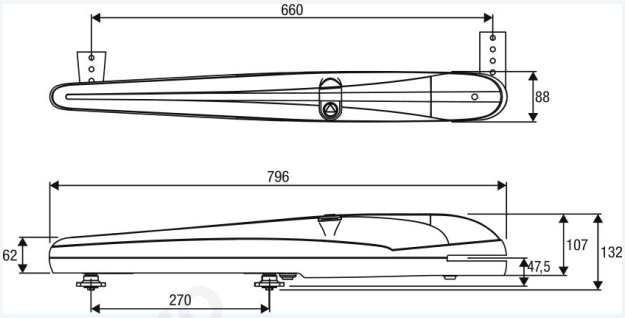

Manufacturer drawing of the BOB2124.DK operator included in the kit.

Price on request

Beninca kit for a two-leaf swing gate with the BOB2124.DK.

Kit: 2 × Swing gate operator. (BOB2124.DK) · 1 × 24 Vdc control unit. (TRUST24) · 1 × Warning light with integrated aerial. (STAR) · 1 × Pair of adjustable photocells. (PUPILLA.T) · 1 × Two-channel transmitter, 433.92 MHz. (TO.GO2VA)

- Beninca order code: 959003464.
- Motor supply: 24 Vdc.
- Maximum thrust: 1500 N.
- Opening time: 12".
- Duty cycle: intensive use.
- Protection rating: IP44.

Manufacturer documents

Manufacturer product sheet · FR

Included TO.GO2VA transmitter · operating instructions

Associated operator product specifications

Official kit product page

Included TO.GO2VA transmitter · operating instructions

Beninca instructions portal · sign-in required

Control Access Distribution · 326 avenue de la Rasclave · 13821 La Penne-sur-Huveaune · France
cad@controlaccessdistri.com +33 4 91 18 82 68 controlaccesspro.com

Indicative public prices excl. VAT. Contact us. Manufacturer illustrations.

COMPLETE GATE KITS

KBOB3024E.DK

KBOB3024E.DK swing gate kit



Beninca photo of the BOB3024E.DK operator · the other kit components are not shown.

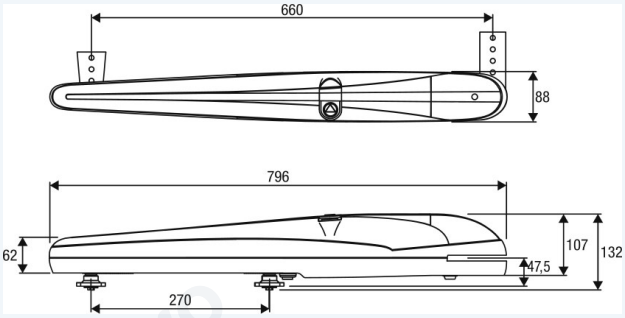

Manufacturer drawing of the BOB3024E.DK operator included in the kit.

Price on request

Beninca kit for a two-leaf swing gate with the BOB3024E.DK.

Kit: 2 × Swing gate operator. (BOB3024E.DK) · 1 × 24 Vdc control unit. (TRUST24) · 1 × Pair of adjustable photocells. (PUPILLA.T) · 1 × Warning light with integrated aerial. (STAR) · 1 × Two-channel transmitter, 433.92 MHz. (TO.GO2VA)

- Beninca order code: 959003487.
- Motor supply: 24 Vdc.
- Maximum thrust: 1500 N.
- Opening time: 12".
- Duty cycle: intensive use.
- Protection rating: IP44.

Manufacturer documents

Manufacturer product sheet · FR

Included TO.GO2VA transmitter · operating instructions

Associated operator product specifications

Official kit product page

Included TO.GO2VA transmitter · operating instructions

Beninca instructions portal · sign-in required

View the full product sheet | Request a quotation

COMPLETE GATE KITS

KBOB30M

KBOB30M swing gate kit



Kit operator shown. See the contents or confirm the version in the quotation.

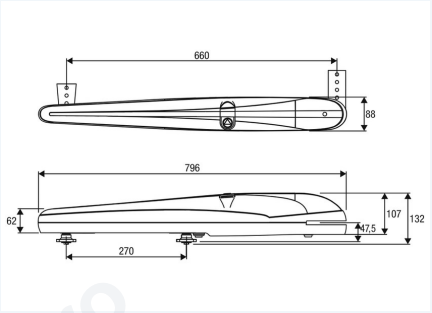

Manufacturer dimensional drawing of the BOB30M operator included in the kit.

€2,021.88 excl. VAT

Beninca kit with two BOB30M actuators, HEADY controller and control accessories.

Kit: 2 × Swing gate operator. (BOB30M) · 1 × 230 Vac control unit. (HEADY) · 1 × Pair of adjustable photocells. (PUPILLA.T) · 1 × Warning light with integrated aerial. (STAR) · 1 × Two-channel transmitter, 433.92 MHz. (TO.GO2VA)

- 2 × BOB30M 230 Vac. Published maximum leaf length: 3 m.
- HEADY, PUPILLA.T, STAR and TO.GO2VA in the manufacturer kit.

ControlAccessPro

Manufacturer documents

Official kit product page

Included TO.GO2VA transmitter · user guide

Official kit product page

Included TO.GO2VA transmitter · user guide

View the full product sheet | Request a quotation

COMPLETE GATE KITS

KBOB30ME.B

KBOB30ME.B swing gate kit



Beninca photo of the BOB30ME operator · the other kit components are not shown.

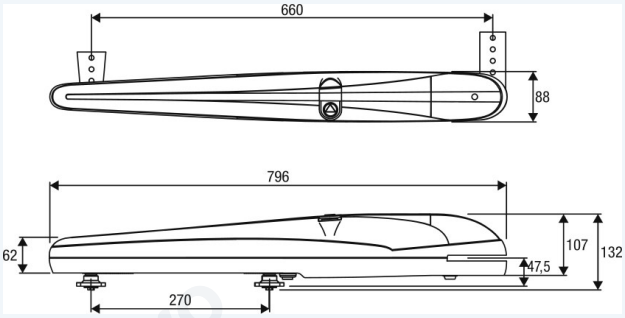

Manufacturer drawing of the BOB30ME operator included in the kit.

Price on request

Beninca kit for a two-leaf swing gate with the BOB30ME.

Kit: 2 × Swing gate operator. (BOB30ME) · 1 × BRAINY PLUS control unit. · 1 × Pair of adjustable photocells. (PUPILLA.T) · 1 × Warning light with integrated aerial. (STAR) · 1 × Two-channel transmitter, 433.92 MHz. (TO.GO2VA)

- Beninca order code: 9598106.
- Motor supply: 230 Vac (50-60Hz).
- Maximum thrust: 2300 N.
- Opening time: 18”.
- Duty cycle: 30%.
- Protection rating: IP44.

Manufacturer documents

Manufacturer product sheet · FR

Included TO.GO2VA transmitter · operating instructions

Associated operator product specifications

Official kit product page

Included TO.GO2VA transmitter · operating instructions

Beninca instructions portal · sign-in required

Control Access Distribution · 326 avenue de la Rasclave · 13821 La Penne-sur-Huveaune · France
cad@controlaccessdistri.com +33 4 91 18 82 68 controlaccesspro.com

Indicative public prices excl. VAT. Contact us. Manufacturer illustrations.

COMPLETE GATE KITS

KBULL424SE

KBULL424SE sliding gate kit



Beninca photo of the BULL424SE operator · the other kit components are not shown.

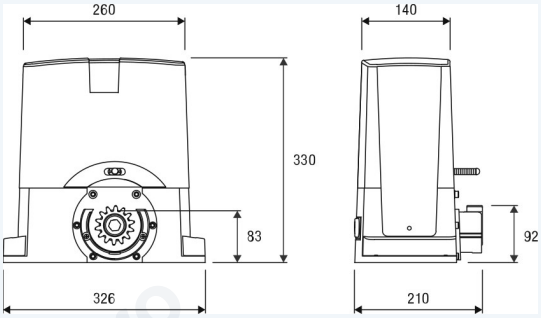

Manufacturer drawing of the BULL424SE operator included in the kit.

Price on request

Beninca kit with the BULL424SE operator for a sliding gate.

Kit: 1 × Sliding gate gearmotor. (BULL424SE) · 1 × Pair of adjustable photocells. (PUPILLA.T) · 1 × Warning light with integrated aerial. (STAR) · 1 × Two-channel transmitter, 433.92 MHz. (TO.GO2VA)

- Beninca order code: 959003665.
- Mains supply: 115 / 230 Vac (50-60Hz).
- Motor supply: 24 Vdc.
- Maximum thrust: 535 N.
- Opening speed: 5.5 ÷ 12 m/min.
- Duty cycle: intensive use.

Manufacturer documents

Manufacturer product sheet · FR

Included TO.GO2VA transmitter · operating instructions

Associated operator product specifications

Official kit product page

Included TO.GO2VA transmitter · operating instructions

Beninca instructions portal · sign-in required

View the full product sheet | Request a quotation

COMPLETE GATE KITS

KBULL424SW

KBULL424SW sliding gate kit



Beninca photo of the BULL424SW operator · the other kit components are not shown.

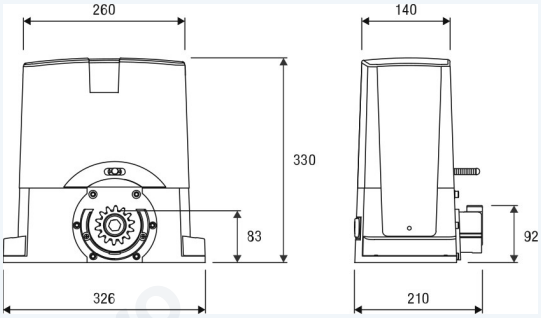

Manufacturer drawing of the BULL424SW operator included in the kit.

Price on request

Beninca kit with the BULL424SW operator for a sliding gate.

Kit: 1 × Sliding gate gearmotor. (BULL424SW) · 1 × Pair of adjustable photocells. (PUPILLA.T) · 1 × Warning light with integrated aerial. (STAR) · 1 × Two-channel transmitter, 433.92 MHz. (TO.GO2VA)

- Beninca order code: 959002462.
- Mains supply: 115 / 230 Vac (50-60Hz).
- Motor supply: 24 Vdc.
- Maximum thrust: 428 N.
- Opening speed: 5.5 ÷ 11 m/min.
- Duty cycle: intensive use.

Manufacturer documents

Manufacturer product sheet · FR

Included TO.GO2VA transmitter · operating instructions

Associated operator product specifications

Official kit product page

Included TO.GO2VA transmitter · operating instructions

Beninca instructions portal · sign-in required

View the full product sheet | Request a quotation

COMPLETE GATE KITS

KBULL624SE

KBULL624SE sliding gate kit



Beninca photo of the BULL624SE operator · the other kit components are not shown.

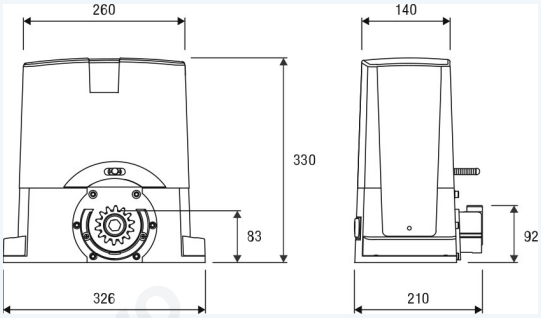

Manufacturer drawing of the BULL624SE operator included in the kit.

Price on request

Beninca kit with the BULL624SE operator for a sliding gate.

Kit: 1 × Sliding gate gearmotor. (BULL624SE) · 1 × Pair of adjustable photocells. (PUPILLA.T) · 1 × Warning light with integrated aerial. (STAR) · 1 × Two-channel transmitter, 433.92 MHz. (TO.GO2VA)

- Beninca order code: 959003638.
- Mains supply: 115 / 230 Vac (50-60Hz).
- Motor supply: 24 Vdc.
- Maximum thrust: 650 N.
- Opening speed: 5.5 ÷ 14 m/min.
- Duty cycle: intensive use.

Manufacturer documents

Manufacturer product sheet · FR

Included TO.GO2VA transmitter · operating instructions

Associated operator product specifications

Official kit product page

Included TO.GO2VA transmitter · operating instructions

Beninca instructions portal · sign-in required

View the full product sheet | Request a quotation

COMPLETE GATE KITS

KBULL624SW

KBULL624SW sliding gate kit



Beninca photo of the BULL624SW operator · the other kit components are not shown.

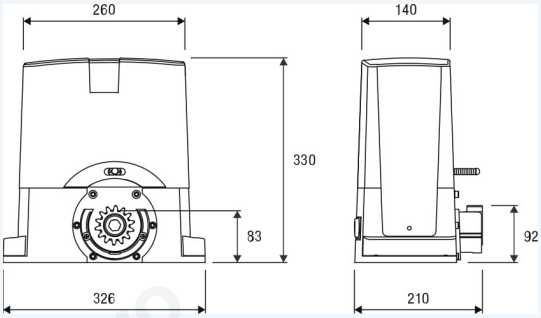

Manufacturer drawing of the BULL624SW operator included in the kit.

Price on request

Beninca kit with the BULL624SW operator for a sliding gate.

Kit: 1 × Sliding gate gearmotor. (BULL624SW) · 1 × Pair of adjustable photocells. (PUPILLA.T) · 1 × Warning light with integrated aerial. (STAR) · 1 × Two-channel transmitter, 433.92 MHz. (TO.GO2VA)

- Beninca order code: 959003503.
- Mains supply: 115 / 230 Vac (50-60Hz).
- Motor supply: 24 Vdc.
- Maximum thrust: 715 N.
- Opening speed: 5.5 ÷ 11 m/min.
- Duty cycle: intensive use.

Manufacturer documents

Manufacturer product sheet · FR

Included TO.GO2VA transmitter · operating instructions

Associated operator product specifications

Official kit product page

Included TO.GO2VA transmitter · operating instructions

Beninca instructions portal · sign-in required

View the full product sheet | Request a quotation

COMPLETE GATE KITS

KBULL624 TURBO

KBULL624 TURBO sliding gate kit



Kit operator shown. See the contents or confirm the version in the quotation.

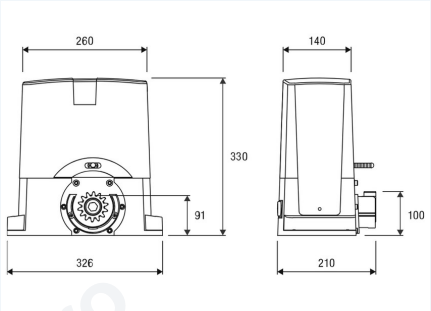

Manufacturer dimensional drawing of the BULL624 TURBO operator included in the kit.

Price on request

Beninca kit with BULL624 TURBO operator, photocells, warning light and transmitter.

Kit: 1 × Sliding gate gearmotor. (BULL624 TURBO) · 1 × Pair of adjustable photocells. (PUPILLA.T) · 1 × Warning light with integrated aerial. (STAR) · 1 × Two-channel transmitter, 433.92 MHz. (TO.GO2VA)

- 24 Vdc operator. Maximum gate weight: 600 kg.
- PUPILLA.T, STAR and TO.GO2VA included in the published kit contents.

ControlAccessPro

Manufacturer documents

Official kit product page

Included TO.GO2VA transmitter · user guide

Official kit product page

Included TO.GO2VA transmitter · user guide

View the full product sheet | Request a quotation

COMPLETE GATE KITS

KBULL6MLT SE

KBULL6MLT SE sliding gate kit



Beninca photo of the BULL6MLT SE operator · the other kit components are not shown.

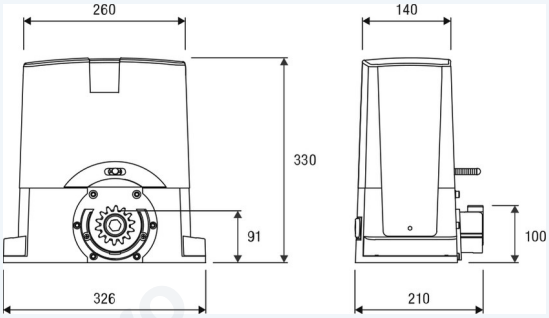

Manufacturer drawing of the BULL6MLT SE operator included in the kit.

Price on request

Beninca kit with the BULL6MLT SE operator for a sliding gate.

Kit: 1 × Sliding gate gearmotor. (BULL6MLT SE) · 1 × Pair of adjustable photocells. (PUPILLA.T) · 1 × Warning light with integrated aerial. (STAR) · 1 × Two-channel transmitter, 433.92 MHz. (TO.GO2VA)

- Beninca order code: 959007247.
- Mains supply: 230 Vac (50-60Hz).
- Motor supply: 230 Vac.
- Maximum thrust: 650 N.
- Opening speed: 10.5 m/min.
- Duty cycle: 30%.

Manufacturer documents

Manufacturer product sheet · FR

Included TO.GO2VA transmitter · operating instructions

Associated operator product specifications

Official kit product page

Included TO.GO2VA transmitter · operating instructions

Beninca instructions portal · sign-in required

View the full product sheet | Request a quotation

COMPLETE GATE KITS

KBULL6M SE.S

KBULL6M SE.S sliding gate kit



Beninca photo of the BULL6M SE.S operator · the other kit components are not shown.

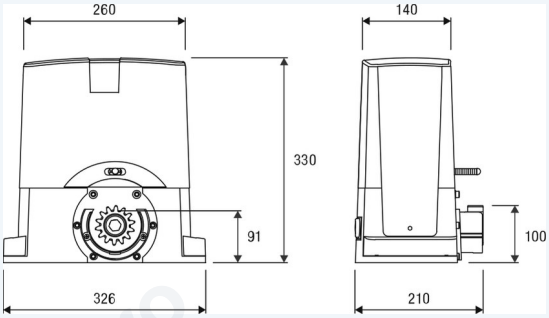

Manufacturer drawing of the BULL6M SE.S operator included in the kit.

Price on request

Beninca kit with the BULL6M SE.S operator for a sliding gate.

Kit: 1 × Sliding gate gearmotor. (BULL6M SE.S) · 1 × Pair of adjustable photocells. (PUPILLA.T) · 1 × Warning light with integrated aerial. (STAR) · 1 × Two-channel transmitter, 433.92 MHz. (TO.GO2VA)

- Beninca order code: 959007248.
- Mains supply: 230 Vac (50-60Hz).
- Motor supply: 230 Vac.
- Maximum thrust: 650 N.
- Opening speed: 10.5 m/min.
- Duty cycle: 30%.

Manufacturer documents

Manufacturer product sheet · FR

Included TO.GO2VA transmitter · operating instructions

Associated operator product specifications

Official kit product page

Included TO.GO2VA transmitter · operating instructions

Beninca instructions portal · sign-in required

View the full product sheet | Request a quotation

COMPLETE GATE KITS

KBULL8M

KBULL8M sliding gate kit



Kit operator shown. See the contents or confirm the version in the quotation.

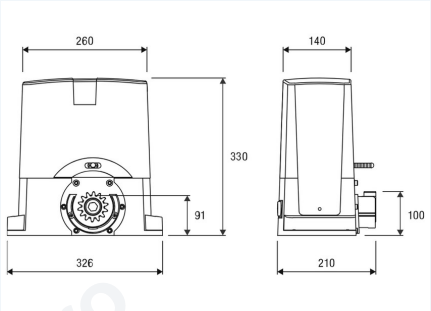

Manufacturer dimensional drawing of the BULL8M operator included in the kit.

€1,277.96 excl. VAT

Beninca kit with BULL8M operator, photocells, warning light and transmitter.

Kit: 1 × Sliding gate gearmotor. (BULL8M) · 1 × Pair of adjustable photocells. (PUPILLA.T) · 1 × Warning light with integrated aerial. (STAR) · 1 × Two-channel transmitter, 433.92 MHz. (TO.GO2VA)

- 230 Vac operator. Maximum gate weight: 800 kg.
- PUPILLA.T, STAR and TO.GO2VA included in the published kit contents.

ControlAccessPro

Manufacturer documents

Official kit product page

Included TO.GO2VA transmitter · user guide

Official kit product page

Included TO.GO2VA transmitter · user guide

View the full product sheet | Request a quotation

COMPLETE GATE KITS

KBULL8OM

KBULL8OM sliding gate kit



Kit operator shown. See the contents or confirm the version in the quotation.

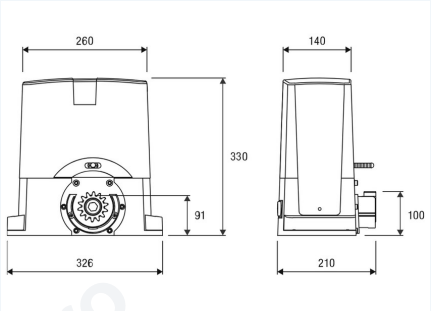

Manufacturer dimensional drawing of the BULL8 OM operator included in the kit.

€1,529.15 excl. VAT

Kit listed in Beninca documentation, based on the oil-lubricated BULL8OM.

Kit: 1 × Sliding gate gearmotor. (BULL8 OM) · 1 × Pair of adjustable photocells. (PUPILLA.T) · 1 × Warning light with integrated aerial. (STAR) · 1 × Two-channel transmitter, 433.92 MHz. (TO.GO2VA)

- 230 Vac BULL8OM operator for gates up to 800 kg according to the archived manufacturer sheet.
- Confirm the available kit variant and its supplied accessories.

ControlAccessPro

Manufacturer documents

Official kit product page

Included TO.GO2VA transmitter · user guide

Official kit product page

Included TO.GO2VA transmitter · user guide

View the full product sheet | Request a quotation

COMPLETE GATE KITS

KPR

KPR swing gate kit



Beninca photo of the PR.45E operator · the other kit components are not shown.

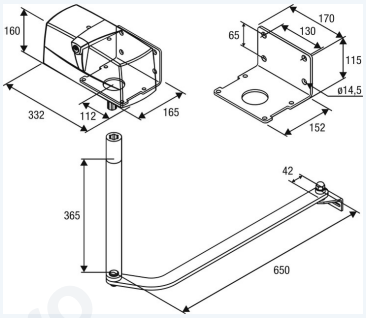

Manufacturer drawing of the PR.45E operator included in the kit.

Price on request

Beninca kit for a two-leaf swing gate with the PR.45E.

Kit: 2 × Swing gate operator. (PR.45E) · 1 × 230 Vac control unit. (HEADY) · 2 × Articulated arm. (DU.E2) · 1 × Pair of adjustable photocells. (PUPILLA.T) · 1 × Warning light with integrated aerial. (STAR) · 1 × Two-channel transmitter, 433.92 MHz. (TO.GO2VA)

- Beninca order code: 9598783.
- Motor supply: 230 Vac (50-60Hz).
- Opening time: 13”.
- Duty cycle: 30%.
- Protection rating: IP44.
- Maximum leaf length: 3.0 m.

Manufacturer documents

Manufacturer product sheet · FR

Included TO.GO2VA transmitter · operating instructions

Associated operator product specifications

Official kit product page

Included TO.GO2VA transmitter · operating instructions

Beninca instructions portal · sign-in required

View the full product sheet | Request a quotation

COMPLETE GATE KITS

KPR24.B

KPR24.B swing gate kit



Beninca photo of the PR.45E24 operator · the other kit components are not shown.

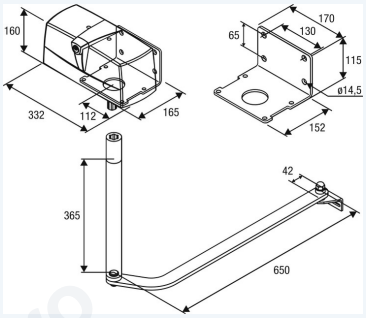

Manufacturer drawing of the PR.45E24 operator included in the kit.

Price on request

Beninca kit for a two-leaf swing gate with the PR.45E24.

Kit: 2 × Swing gate operator. (PR.45E24) · 1 × 24 Vdc control unit. (BRAINY24) · 2 × Articulated arm. (DU.E2) · 1 × Pair of adjustable photocells. (PUPILLA.T) · 1 × Warning light with integrated aerial. (STAR) · 1 × Two-channel transmitter, 433.92 MHz. (TO.GO2VA)

- Beninca order code: 9592076.
- Motor supply: 24 Vdc.
- Opening time: 9”.
- Duty cycle: intensive use.
- Protection rating: IP44.
- Maximum leaf length: 3.0 m.

Manufacturer documents

Manufacturer product sheet · FR

Included TO.GO2VA transmitter · operating instructions

Associated operator product specifications

Official kit product page

Included TO.GO2VA transmitter · operating instructions

Beninca instructions portal · sign-in required

View the full product sheet | Request a quotation

COMPLETE GATE KITS

KPRE.B

KPRE.B swing gate kit



Beninca photo of the PR.45EE operator · the other kit components are not shown.

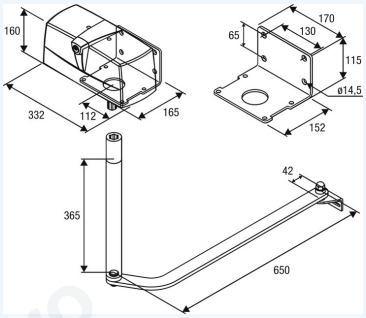

Manufacturer drawing of the PR.45EE operator included in the kit.

Price on request

Beninca kit for a two-leaf swing gate with the PR.45EE.

Kit: 2 × Swing gate operator. (PR.45EE) · 1 × BRAINY PLUS control unit. · 2 × Articulated arm. (DU.E2) · 1 × Pair of adjustable photocells. (PUPILLA.T) · 1 × Warning light with integrated aerial. (STAR) · 1 × Two-channel transmitter, 433.92 MHz. (TO.GO2VA)

- Beninca order code: 959007257.
- Motor supply: 230 Vac (50-60Hz).
- Opening time: 13".
- Duty cycle: 30%.
- Protection rating: IP44.
- Maximum leaf length: 3.0 m.

Manufacturer documents

Manufacturer product sheet · FR

Included TO.GO2VA transmitter · operating instructions

Associated operator product specifications

Official kit product page

Included TO.GO2VA transmitter · operating instructions

Beninca instructions portal · sign-in required

View the full product sheet | Request a quotation

Contents | Reference index | Request a quotation

COMPLETE GATE KITS

KSAM

KSAM swing gate kit



Beninca photo of the SAM.E24 operator · the other kit components are not shown.

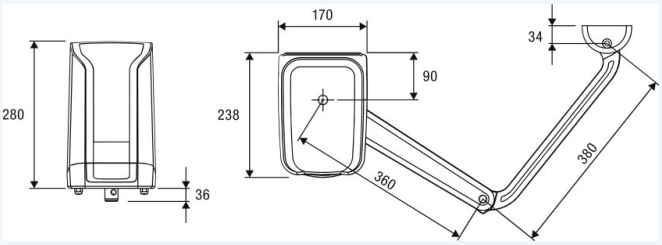

Manufacturer drawing of the SAM.E24 operator included in the kit.

Price on request

Beninca kit for a two-leaf swing gate with the SAM.E24.

Kit: 1 × Swing gate operator. (SAM.24) · 2 × SAM articulated arm. (SAM.BA) · 1 × Two-channel transmitter, 433.92 MHz. (TO.GO2VA) · 1 × Warning light with integrated aerial. (STAR) · 1 × Swing gate operator. (SAM.E24) · 1 × Pair of adjustable photocells. (PUPILLA.T)

- Beninca order code: 959002578.
- Mains supply: 100 ÷ 250 Vac (50-60Hz).
- Motor supply: 24 Vdc.
- Opening time: 14” (including slowdown).
- Duty cycle: intensive use.
- Protection rating: IP44.

Manufacturer documents

Manufacturer product sheet · FR

Included TO.GO2VA transmitter · operating instructions

Associated operator product specifications

Official kit product page

Included TO.GO2VA transmitter · operating instructions

Beninca instructions portal · sign-in required

View the full product sheet | Request a quotation

Contents | Reference index | Request a quotation

COMPLETE GATE KITS

KSAM PLUS

KSAM PLUS swing gate kit



Beninca photo of the SAM.E24 PLUS operator · the other kit components are not shown.

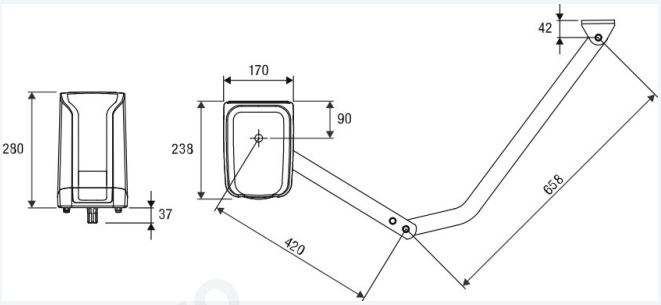

Manufacturer drawing of the SAM.E24 PLUS operator included in the kit.

Price on request

Beninca kit for a two-leaf swing gate with the SAM.E24 PLUS.

Kit: 1 × Swing gate operator. (SAM.E24 PLUS) · 1 × Swing gate operator. (SAM.24 PLUS) · 2 × SAM PLUS articulated arm. (SAM.BA PLUS) · 1 × Pair of adjustable photocells. (PUPILLA.T) · 1 × Warning light with integrated aerial. (STAR) · 1 × Two-channel transmitter, 433.92 MHz. (TO.GO2VA)

- Beninca order code: 959007002.
- Mains supply: 100 ÷ 250 Vac (50-60Hz).
- Motor supply: 24 Vdc.
- Opening time: 16” (including slowdown).
- Duty cycle: intensive use.
- Protection rating: IP44.

Manufacturer documents

Manufacturer product sheet · FR

Included TO.GO2VA transmitter · operating instructions

Associated operator product specifications

Official kit product page

Included TO.GO2VA transmitter · operating instructions

Beninca instructions portal · sign-in required

View the full product sheet | Request a quotation

COMPLETE GATE KITS

KTOM3024E

KTOM3024E swing gate kit



Beninca photo of the TOM3024E operator · the other kit components are not shown.

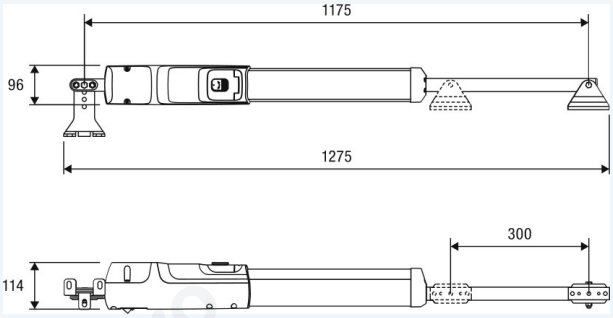

Manufacturer drawing of the TOM3024E operator included in the kit.

Price on request

Beninca kit for a two-leaf swing gate with the TOM3024E.

Kit: 2 × Swing gate operator. (TOM3024E) · 1 × 24 Vdc control unit. (TRUST24) · 1 × Pair of adjustable photocells. (PUPILLA.T) · 1 × Warning light with integrated aerial. (STAR) · 1 × Two-channel transmitter, 433.92 MHz. (TO.GO2VA)

- Beninca order code: 959003362.
- Motor supply: 24 Vdc.
- Maximum thrust: 1500 N.
- Opening time: 11".
- Duty cycle: intensive use.
- Protection rating: IP44.

Manufacturer documents

Manufacturer product sheet · FR

Included TO.GO2VA transmitter · operating instructions

Associated operator product specifications

Official kit product page

Included TO.GO2VA transmitter · operating instructions

Beninca instructions portal · sign-in required

View the full product sheet | Request a quotation

COMPLETE GATE KITS

KTOM30M

KTOM30M swing gate kit



Beninca photo of the TOM30M operator · the other kit components are not shown.

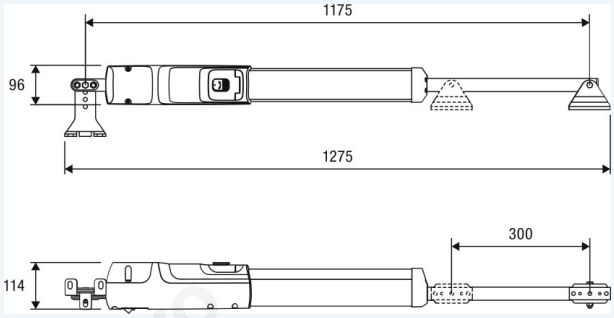

Manufacturer drawing of the TOM30M operator included in the kit.

Price on request

Beninca kit for a two-leaf swing gate with the TOM30M.

Kit: 2 × Swing gate operator. (TOM30M) · 1 × 230 Vac control unit. (HEADY) · 1 × Pair of adjustable photocells. (PUPILLA.T) · 1 × Warning light with integrated aerial. (STAR) · 1 × Two-channel transmitter, 433.92 MHz. (TO.GO2VA)

- Beninca order code: 959003363.
- Motor supply: 230 Vac (50-60Hz).
- Maximum thrust: 2000 N.
- Opening time: 18".
- Duty cycle: 30%.
- Protection rating: IP44.

Manufacturer documents

Manufacturer product sheet · FR

Included TO.GO2VA transmitter · operating instructions

Associated operator product specifications

Official kit product page

Included TO.GO2VA transmitter · operating instructions

Beninca instructions portal · sign-in required

View the full product sheet | Request a quotation

COMPLETE GATE KITS

KTOM30ME.B

KTOM30ME.B swing gate kit



Beninca photo of the TOM30ME operator · the other kit components are not shown.

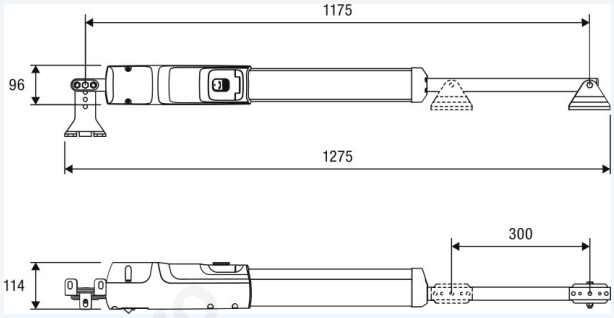

Manufacturer drawing of the TOM30ME operator included in the kit.

Price on request

Beninca kit for a two-leaf swing gate with the TOM30ME.

Kit: 2 × Swing gate operator. (TOM30ME) · 1 × BRAINY PLUS control unit. · 1 × Pair of adjustable photocells. (PUPILLA.T) · 1 × Warning light with integrated aerial. (STAR) · 1 × Two-channel transmitter, 433.92 MHz. (TO.GO2VA)

- Beninca order code: 959003364.
- Motor supply: 230 Vac (50-60Hz).
- Maximum thrust: 2000 N.
- Opening time: 18".
- Duty cycle: 30%.
- Protection rating: IP44.

Manufacturer documents

Manufacturer product sheet · FR

Included TO.GO2VA transmitter · operating instructions

Associated operator product specifications

Official kit product page

Included TO.GO2VA transmitter · operating instructions

Beninca instructions portal · sign-in required

View the full product sheet | Request a quotation

COMPLETE GATE KITS

KTOM4024E

KTOM4024E swing gate kit



Beninca photo of the TOM4024E operator · the other kit components are not shown.

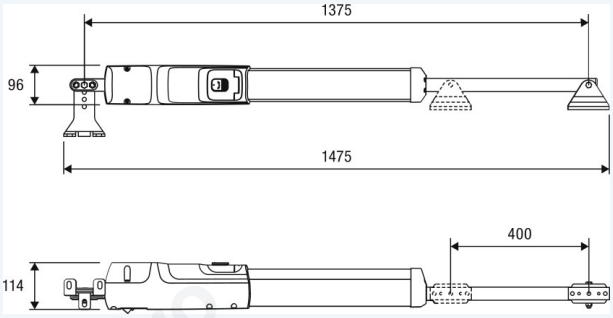

Manufacturer drawing of the TOM4024E operator included in the kit.

Price on request

Beninca kit for a two-leaf swing gate with the TOM4024E.

Kit: 2 × Swing gate operator. (TOM4024E) · 1 × 24 Vdc control unit. (TRUST24) · 1 × Pair of adjustable photocells. (PUPILLA.T) · 1 × Warning light with integrated aerial. (STAR) · 1 × Two-channel transmitter, 433.92 MHz. (TO.GO2VA)

- Beninca order code: 959003366.
- Motor supply: 24 Vdc.
- Maximum thrust: 1500 N.
- Opening time: 15".
- Duty cycle: intensive use.
- Protection rating: IP44.

Manufacturer documents

Manufacturer product sheet · FR

Included TO.GO2VA transmitter · operating instructions

Associated operator product specifications

Official kit product page

Included TO.GO2VA transmitter · operating instructions

Beninca instructions portal · sign-in required

View the full product sheet | Request a quotation

COMPLETE GATE KITS

KTOM40M

KTOM40M swing gate kit



Beninca photo of the TOM40M operator · the other kit components are not shown.

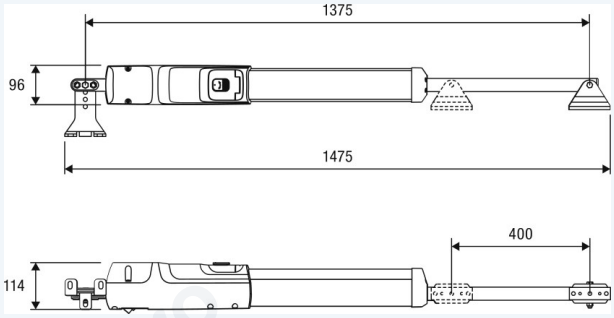

Manufacturer drawing of the TOM40M operator included in the kit.

Price on request

Beninca kit for a two-leaf swing gate with the TOM40M.

Kit: 2 × Swing gate operator. (TOM40M) · 1 × 230 Vac control unit. (HEADY) · 1 × Pair of adjustable photocells. (PUPILLA.T) · 1 × Warning light with integrated aerial. (STAR) · 1 × Two-channel transmitter, 433.92 MHz. (TO.GO2VA)

- Beninca order code: 959003367.
- Motor supply: 230 Vac (50-60Hz).
- Maximum thrust: 2000 N.
- Opening time: 24".
- Duty cycle: 30%.
- Protection rating: IP44.

Manufacturer documents

Manufacturer product sheet · FR

Included TO.GO2VA transmitter · operating instructions

Associated operator product specifications

Official kit product page

Included TO.GO2VA transmitter · operating instructions

Beninca instructions portal · sign-in required

View the full product sheet | Request a quotation

Contents | Reference index | Request a quotation

COMPLETE GATE KITS

KVN.M20ESW

KVN.M20ESW industrial door kit



Beninca photo of the VN.M20 ESW operator · the other kit components are not shown.

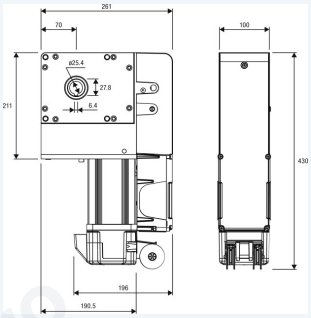

Manufacturer drawing of the VN.M20 ESW operator included in the kit.

Price on request

Beninca kit for sectional and roller doors with the VN.M20 ESW, THINKY control unit and a 5 m cable.

Kit: 1 × Industrial door gearmotor. (VN.M20 ESW) · 1 × THINKY control unit. · 1 × 5 m connection cable. (CABLE VN.ESW 5)

- Beninca order code: 9592622.
- Mains supply: 230 Vac (50-60Hz).
- Motor supply: 230 Vac.
- Maximum torque: 130 Nm.
- Output speed: 24 r.p.m..
- Shaft bore: 1” (25.4 mm).

ControlAccessPro

Manufacturer documents

Manufacturer product sheet · FR

Official kit product page

Associated operator product specifications

Beninca instructions portal · sign-in required

View the full product sheet | Request a quotation

SLIDING GATE OPERATORS

BUFFALO160 OTI

BUFFALO160 OTI · heavy-duty industrial sliding gate operator



Manufacturer image of the model.

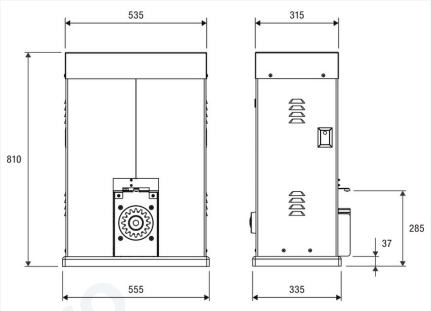

BUFFALO160 OTI dimensional drawing published by Beninca.

€16,014.88 excl. VAT

Industrial operator with oil-bath gearbox for very heavy gates. Site and duty requirements are required for a quotation.

- Mains supply · 230 Vac (50-60Hz)
- Motor supply · 230 Vac
- Maximum gate weight · 16000 kg
- Maximum thrust · 12650 N
- Opening speed · 4 ÷ 16 m/min
- Duty cycle · S3 70%

Manufacturer documents

Official Beninca product page

Official Beninca product page

View the full product sheet | Request a quotation

SLIDING GATE OPERATORS

BULL10M.S

BULL10M.S · Sliding gate operator



Manufacturer image associated with the BULL10M.S product page.

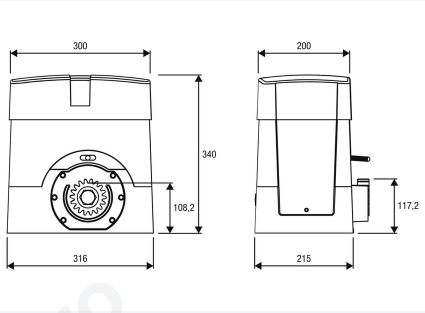

BULL10M.S dimensional drawing published by Beninca.

Price on request

230 Vac sliding gate operator up to 1,000 kg, with encoder and magnetic limit switches.

- Maximum gate weight: 1000 kg.
- Motor supply: 230 Vac.
- Power supply: 230 Vac (50-60Hz).
- Maximum thrust: 1000 N.
- Opening speed: 10.5 m/min.
- Duty cycle: 40%.

ControlAccessPro

Manufacturer documents

Manufacturer product page · FR

Manufacturer product page · EN

View the full product sheet | Request a quotation

SLIDING GATE OPERATORS

BULL1224 TURBO.S

BULL1224 TURBO.S · Sliding gate operator



Manufacturer image associated with the BULL1224 TURBO.S product page.

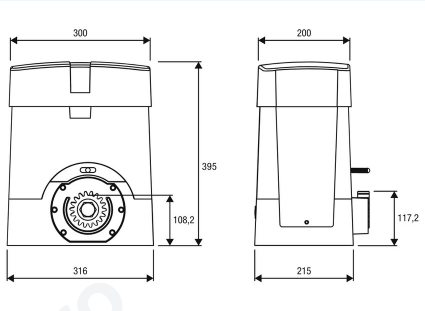

BULL1224 TURBO.S dimensional drawing published by Beninca.

Price on request

Fast 24 Vdc sliding gate operator up to 1,200 kg, with magnetic limit switches and a virtual encoder.

- Maximum gate weight: 1200 kg.
- Motor supply: 24 Vdc.
- Power supply: 115 Vac / 230 Vac (50-60Hz).
- Maximum thrust: 550 N.
- Opening speed: 12.5 ÷ 24 m/min.
- Duty cycle: 80%.

ControlAccessPro

Manufacturer documents

Manufacturer product page · FR

Manufacturer product page · EN

View the full product sheet | Request a quotation

SLIDING GATE OPERATORS

BULL15M

BULL15M · shared-access sliding gate operator



Manufacturer image of the model.

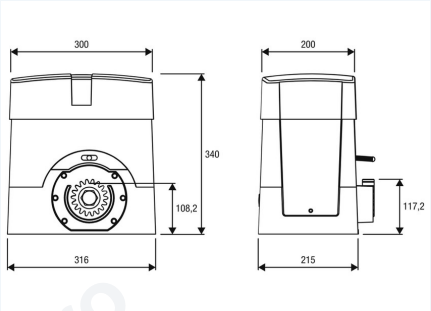

BULL15M dimensional drawing published by Beninca.

€1,691.52 excl. VAT

Operator with integrated electronics for heavy sliding gates at shared premises.

- Mains supply · 230 Vac (50-60Hz)
- Motor supply · 230 Vac
- Maximum gate weight · 1500 kg
- Maximum thrust · 1250 N
- Opening speed · 10.5 m/min
- Duty cycle · 60%

Manufacturer documents

Official Beninca product page

Official Beninca product page

View the full product sheet | Request a quotation

SLIDING GATE OPERATORS

BULL17 OMI

BULL17 OMI · Sliding gate operator



Manufacturer image associated with the BULL17 OMI product page.

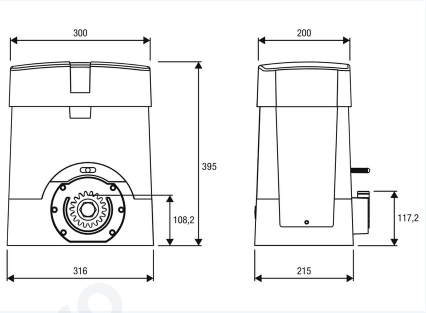

BULL17 OMI dimensional drawing published by Beninca.

Price on request

Oil-bath industrial sliding gate operator with inverter and integrated controls for gates up to 1,700 kg.

- Maximum gate weight: 1700 kg.
- Motor supply: 230 Vac.
- Power supply: 230 Vac (50-60Hz).
- Maximum thrust: 1880 N.
- Opening speed: 24 m/min.
- Duty cycle: 80%.

ControlAccessPro

Manufacturer documents

Manufacturer product page · FR

Manufacturer product page · EN

View the full product sheet | Request a quotation

SLIDING GATE OPERATORS

BULL20 HE

BULL20 HE · industrial sliding gate operator



Manufacturer image of the model.

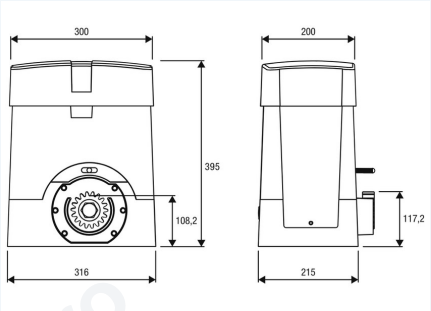

BULL20 HE dimensional drawing published by Beninca.

€1,292.24 excl. VAT

Fan-cooled drive with oil-bath gearbox, integrated controls and encoder for frequent operation.

- Mains supply · 230 Vac (50Hz)
- Motor supply · 230 Vac
- Maximum gate weight · 2000 kg
- Maximum thrust · 1100 N
- Opening speed · 10.5 m/min
- Duty cycle · 80%

ControlAccessPro

Manufacturer documents

Official Beninca product page

Official Beninca product page

View the full product sheet | Request a quotation

Contents | Reference index | Request a quotation

SLIDING GATE OPERATORS

BULL624SE.S

BULL624SE.S · sliding gate operator with magnetic limits



Manufacturer image shared across range variants.

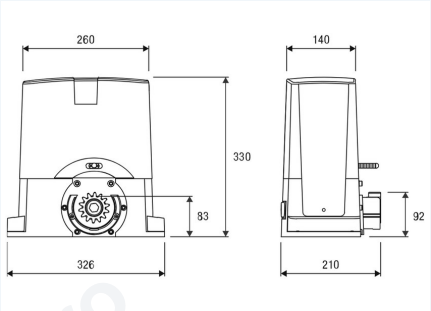

BULL624SE.S dimensional drawing published by Beninca.

Price on request

24 Vdc sliding gate operator with magnetic limits and built-in controller.

- Mains supply · 115 / 230 Vac (50-60Hz)
- Motor supply · 24 Vdc
- Maximum gate weight · 600 kg
- Maximum thrust · 650 N
- Opening speed · 5.5 ÷ 14 m/min
- Duty cycle · intensive use

ControlAccessPro

Manufacturer documents

Official Beninca product page

Official Beninca product page

View the full product sheet | Request a quotation

SLIDING GATE OPERATORS

BULL624 TURBO

BULL624 TURBO · fast sliding gate operator



Manufacturer image of the model.

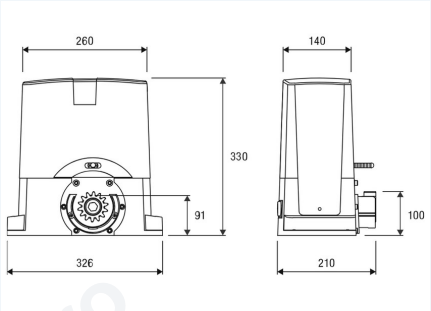

BULL624 TURBO dimensional drawing published by Beninca.

€1,463.35 excl. VAT

24 Vdc operator for shared entrances, with integrated control and virtual encoder torque management.

- Mains supply · 115 Vac / 230 Vac (50-60Hz)
- Motor supply · 24 Vdc
- Maximum gate weight · 600 kg
- Maximum thrust · 330 N
- Opening speed · 12.5 ÷ 25.5 m/min
- Duty cycle · 60%

ControlAccessPro

Manufacturer documents

Official Beninca product page

Official Beninca product page

View the full product sheet | Request a quotation

SLIDING GATE OPERATORS

BULL6M SE.S

BULL6M SE.S · Sliding gate operator



Manufacturer image shared by the BULL models shown.

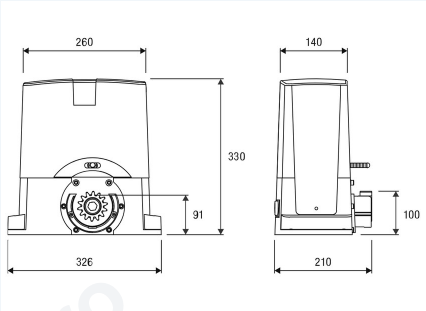

BULL6M SE.S dimensional drawing published by Beninca.

Price on request

Residential sliding gate operator for gates up to 600 kg, with built-in controls and magnetic limit switches.

- Maximum gate weight: 600 kg.
- Motor supply: 230 Vac.
- Power supply: 230 Vac (50-60Hz).
- Maximum thrust: 650 N.
- Opening speed: 10,5 m/min.
- Duty cycle: 30%.

Manufacturer documents

Manufacturer product page · FR

Manufacturer product page · EN

View the full product sheet | Request a quotation

Contents | Reference index | Request a quotation

SLIDING GATE OPERATORS

BULL8M

BULL8M · 230 V sliding gate operator



Manufacturer image shared across range variants.

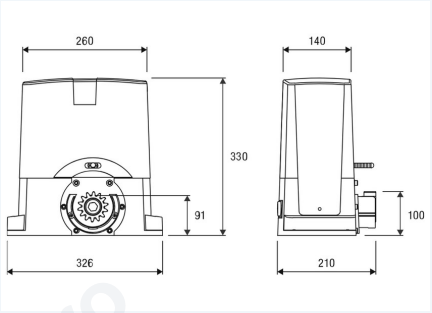

BULL8M dimensional drawing published by Beninca.

€1,144.19 excl. VAT

230 V sliding gate operator with built-in control and encoder for shared access.

- Mains supply · 230 Vac (50-60Hz)
- Motor supply · 230 Vac
- Maximum gate weight · 800 kg
- Maximum thrust · 940 N
- Opening speed · 10.5 m/min
- Duty cycle · 30%

ControlAccessPro

Manufacturer documents

Official Beninca product page

Official Beninca product page

View the full product sheet | Request a quotation

Contents | Reference index | Request a quotation

SLIDING GATE OPERATORS

BULL8 OM

BULL8 OM · Sliding gate operator



Manufacturer image shared by the BULL models shown.

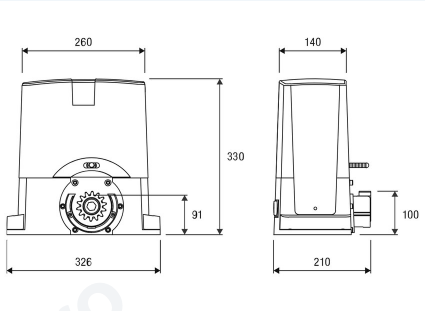

BULL8 OM dimensional drawing published by Beninca.

Price on request

Oil-bath gear motor with integrated controls for shared sliding gates up to 800 kg.

- Maximum gate weight: 800 kg.
- Motor supply: 230 Vac.
- Power supply: 230 Vac (50-60Hz).
- Maximum thrust: 940 N.
- Opening speed: 10.5 m/min.
- Duty cycle: 40%.

ControlAccessPro

Manufacturer documents

Manufacturer product page · FR

Manufacturer product page · EN

View the full product sheet | Request a quotation

SWING GATE OPERATORS

BILL30M

BILL30M · residential swing gate actuator



Manufacturer image of the model.

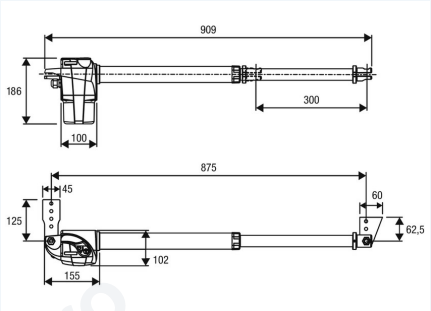

BILL30M dimensional drawing published by Beninca.

€552.02 excl. VAT

Linear operator for residential swing gates with top-access manual release.

- Motor supply · 230 Vac (50-60Hz)
- Maximum leaf length · 2.5 m
- Maximum thrust · 2800 N
- Standard stroke · 300 mm
- Opening time · 16"
- Protection rating · IP54

ControlAccessPro

Manufacturer documents

Official Beninca product page

Official Beninca product page

View the full product sheet | Request a quotation

SWING GATE OPERATORS

BILL4024

BILL4024 · Swing gate operator



Manufacturer image associated with the BILL4024 product page.

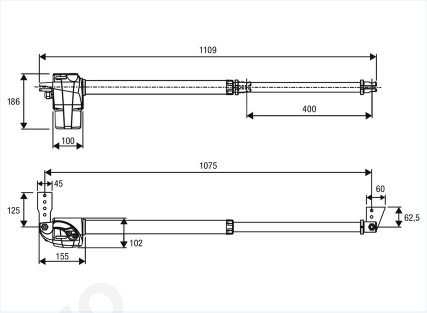

BILL4024 dimensional drawing published by Beninca.

Price on request

Self-locking 24 Vdc linear actuator for leaves up to 3.5 m, with 400 mm nominal stroke.

- Leaf max dimension: 3.5 m.
- Motor supply: 24 Vdc.
- Maximum thrust: 2000 N.
- Opening time: 15”.
- Duty cycle: intensive use.
- Protection level: IP54.

ControlAccessPro

Manufacturer documents

Manufacturer product page · FR

Manufacturer product page · EN

View the full product sheet | Request a quotation

Contents | Reference index | Request a quotation

SWING GATE OPERATORS

BILL50M

BILL50M · long-stroke swing gate actuator



Manufacturer image of the model.

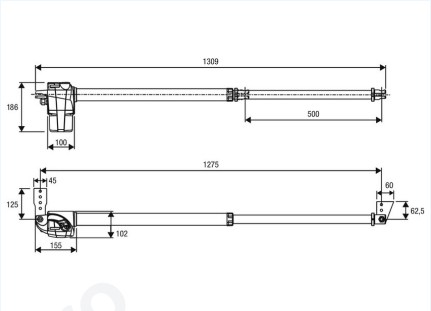

BILL50M dimensional drawing published by Beninca.

€617.82 excl. VAT

230 V linear actuator with a 500 mm standard stroke. Check the leaf geometry and required force.

- Motor supply · 230 Vac (50-60Hz)
- Maximum leaf length · 4.0 m
- Maximum thrust · 2800 N
- Standard stroke · 500 mm
- Opening time · 21”
- Protection rating · IP54

ControlAccessPro

Manufacturer documents

Official Beninca product page

Official Beninca product page

View the full product sheet | Request a quotation

SWING GATE OPERATORS

BOB3024E

BOB3024E · Swing gate operator

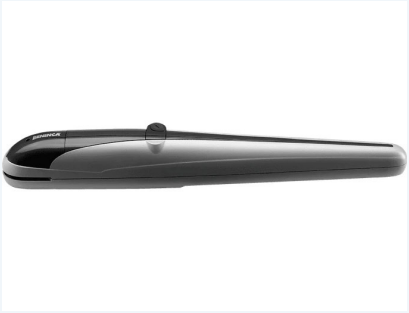

Manufacturer image associated with the BOB3024E product page.

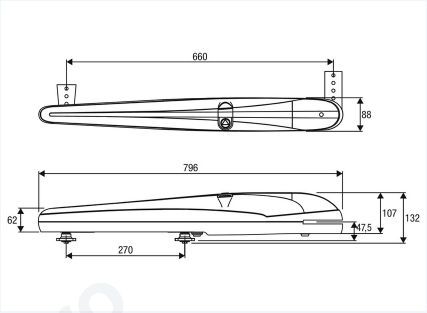

BOB3024E dimensional drawing published by Beninca.

Price on request

Self-locking 24 Vdc linear actuator with encoder for swing gate leaves up to 3 m.

- Leaf max dimension: 3.0 m.
- Motor supply: 24 Vdc.
- Maximum thrust: 1800 N.
- Opening time: 9" ÷ 21".
- Duty cycle: intensive use.
- Protection level: IP44.

ControlAccessPro

Manufacturer documents

Manufacturer product page · FR

Manufacturer product page · EN

View the full product sheet | Request a quotation

SWING GATE OPERATORS

BOB30M

BOB30M · self-locking swing gate actuator



Manufacturer image of the model.

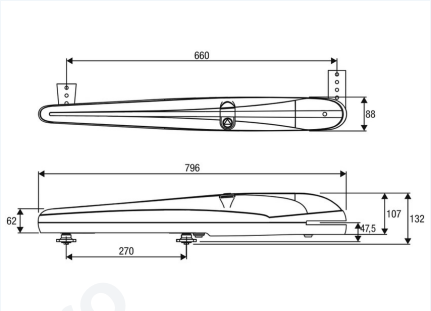

BOB30M dimensional drawing published by Beninca.

€721.42 excl. VAT

230 V swing gate actuator with adjustable mechanical stops and top-access release.

- Motor supply · 230 Vac (50-60Hz)
- Maximum leaf length · 3.0 m
- Maximum thrust · 2300 N
- Standard stroke · 270 mm
- Opening time · 18”
- Protection rating · IP44

ControlAccessPro

Manufacturer documents

Official Beninca product page

Official Beninca product page

View the full product sheet | Request a quotation

SWING GATE OPERATORS

BOB50M

BOB50M · long-leaf swing gate actuator



Manufacturer image of the model.

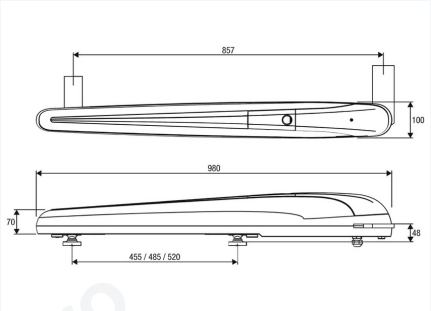

BOB50M dimensional drawing published by Beninca.

€911.79 excl. VAT

230 V self-locking actuator for large leaves, selected according to gate geometry and weight.

- Motor supply · 230 Vac (50-60Hz)
- Maximum leaf length · 5.0 m
- Maximum thrust · 3500 N
- Standard stroke · 455 mm
- Opening time · 26"
- Protection rating · IP44

ControlAccessPro

Manufacturer documents

Official Beninca product page

Official Beninca product page

View the full product sheet | Request a quotation

SWING GATE OPERATORS

DU.350FX

DU.350FX · underground swing gate operator



Manufacturer image of the model.

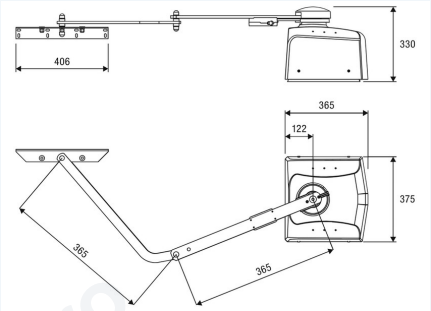

DU.350FX dimensional drawing published by Beninca.

€2,145.08 excl. VAT

Self-locking electromechanical operator for large gates. Specify the foundation box and drainage for the project.

- Motor supply · 230 Vac (50-60Hz)
- Maximum leaf length · 4 m
- Torque · 270 Nm
- Opening time · 16" ÷ 20"
- Protection rating · IP67

Manufacturer documents

Official Beninca product page

Official Beninca product page

View the full product sheet | Request a quotation

SWING GATE OPERATORS

DU.IT14NE

DU.IT14NE · Swing gate operator

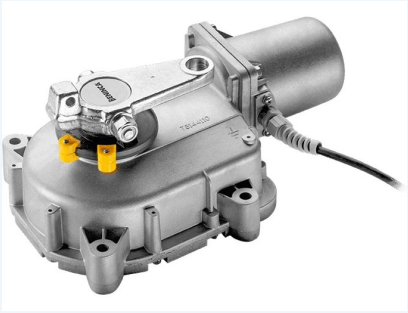

Manufacturer image associated with the DU.IT14NE product page.

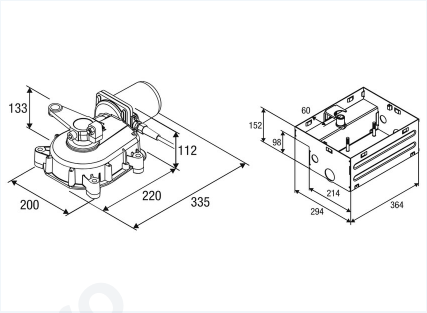

DU.IT14NE dimensional drawing published by Beninca.

Price on request

230 Vac underground operator for leaves up to 3.5 m. The motor is IP67 and its encoder IP68.

- Leaf max dimension: 3.5 m.
- Motor supply: 230 Vac (50-60Hz).
- Torque: 370 Nm.
- Opening time: 22”.
- Duty cycle: 30%.
- Protection level: IP67.

ControlAccessPro

Manufacturer documents

Manufacturer product page · FR

Manufacturer product page · EN

View the full product sheet | Request a quotation

SWING GATE OPERATORS

PR.45E24

PR.45E24 · Swing gate operator



Manufacturer image associated with the PR.45E24 product page.

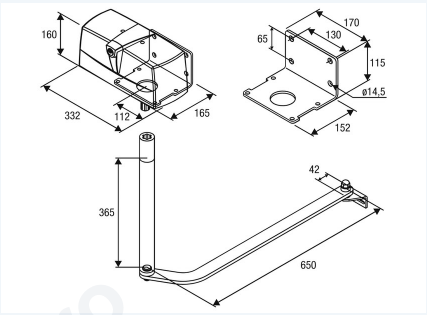

PR.45E24 dimensional drawing published by Beninca.

Price on request

24 Vdc articulated-arm operator for shared swing gates, rated at 320 Nm.

- Leaf max dimension: 3,0 m.
- Motor supply: 24 Vdc.
- Torque: 320 Nm.
- Opening time: 9”.
- Duty cycle: intensive use.
- Protection level: IP44.

ControlAccessPro

Manufacturer documents

Manufacturer product page · FR

Manufacturer product page · EN

View the full product sheet | Request a quotation

SWING GATE OPERATORS

SAM.E24

SAM.E24 · Swing gate operator



Manufacturer image associated with the SAM.E24 product page.

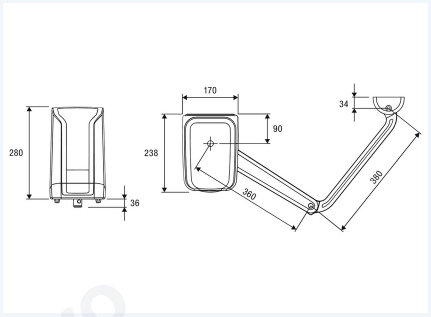

SAM.E24 dimensional drawing published by Beninca.

Price on request

24 Vdc articulated-arm operator with integrated controls and receiver for residential leaves up to 2.5 m.

- Leaf max dimension: 2.5 m.
- Motor supply: 24 Vdc.
- Power supply: 100 ÷ 250 Vac (50-60Hz).
- Torque: 220 Nm.
- Opening time: 14” (including slowdown).
- Duty cycle: intensive use.

ControlAccessPro

Manufacturer documents

Manufacturer product page · FR

Manufacturer product page · EN

View the full product sheet | Request a quotation

Contents | Reference index | Request a quotation

SWING GATE OPERATORS

SAM.E24 PLUS

SAM.E24 PLUS · Swing gate operator



Manufacturer image associated with the SAM.E24 PLUS product page.

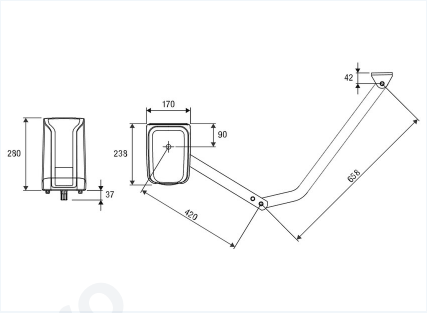

SAM.E24 PLUS dimensional drawing published by Beninca.

Price on request

240 Nm articulated-arm 24 Vdc operator for shared swing gate leaves up to 3 m.

- Leaf max dimension: 3 m.
- Motor supply: 24 Vdc.
- Power supply: 100 ÷ 250 Vac (50-60Hz).
- Torque: 240 Nm.
- Opening time: 16” (including slowdown).
- Duty cycle: intensive use.

ControlAccessPro

Manufacturer documents

Manufacturer product page · FR

Manufacturer product page · EN

View the full product sheet | Request a quotation

SECTIONAL AND INDUSTRIAL DOORS

JACK24.50

JACK24.50 · 50 Nm side-mounted operator



Manufacturer image shared across range variants.

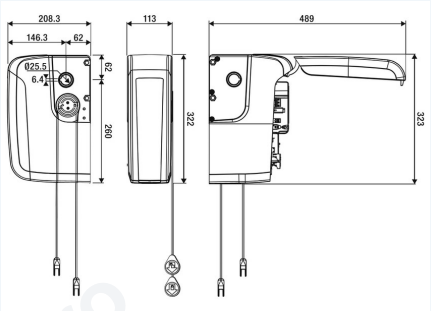

JACK24.50 dimensional drawing published by Beninca.

Price on request

24 Vdc side-mounted shaft operator with integrated control and virtual encoder.

- Motor supply · 24 Vdc
- Door area · 20 m² max.
- Maximum torque · 50 Nm
- Output speed · 34 rpm
- Output bore · 1” (25.4 mm)
- Duty cycle · intensive use

ControlAccessPro

Manufacturer documents

Official Beninca product page

Official Beninca product page

View the full product sheet | Request a quotation

SECTIONAL AND INDUSTRIAL DOORS

JACK24.80

JACK24.80 · 80 Nm side-mounted operator



Manufacturer image shared across range variants.

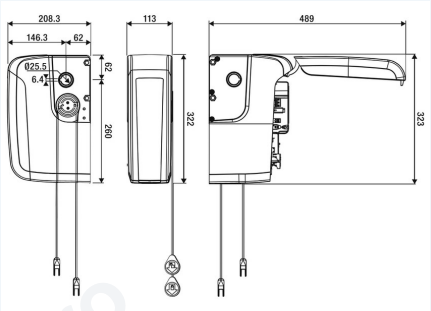

JACK24.80 dimensional drawing published by Beninca.

€1,337.35 excl. VAT

Higher-torque sectional door operator with integrated control and shaft mounting.

- Motor supply · 24 Vdc
- Door area · 35 m² max.
- Maximum torque · 80 Nm
- Output speed · 22 rpm
- Output bore · 1” (25.4 mm)
- Duty cycle · intensive use

Manufacturer documents

Official Beninca product page

Official Beninca product page

View the full product sheet | Request a quotation

Contents | Reference index | Request a quotation

SECTIONAL AND INDUSTRIAL DOORS

JM.3ESA TURBO

JM.3ESA TURBO · fast sectional door operator



Manufacturer image of the model.

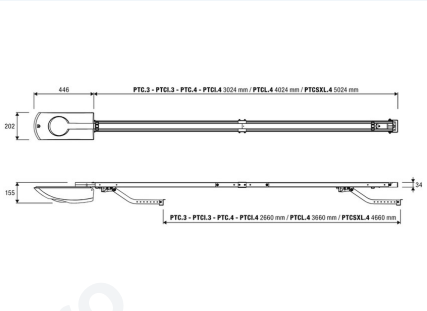

JM.3ESA TURBO dimensional drawing published by Beninca.

Price on request

Sectional door operator with integrated encoder and electronics. Select rail and control options to suit the door.

- Motor supply · 24 Vdc
- Door area · 11 m² max.
- Pulling/pushing force · 600 N
- Duty cycle · intensive use
- Protection rating · IP40

Manufacturer documents

Official Beninca product page

Official Beninca product page

View the full product sheet | Request a quotation

Contents | Reference index | Request a quotation

SECTIONAL AND INDUSTRIAL DOORS

JM.4ESA

JM.4ESA · Door operator



Manufacturer image associated with the JM.4ESA product page.

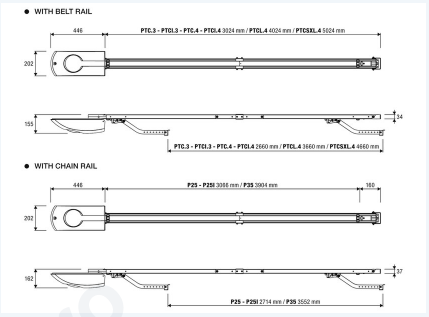

JM.4ESA dimensional drawing published by Beninca.

Price on request

24 Vdc garage door operator for doors up to 22 m², with encoder and built-in controls.

- Door surface area: 22 □/max.
- Motor supply: 24 Vdc.
- Power supply: 230 Vac (50-60Hz).
- Thrust: 1200 N.
- Opening speed: 8.9 m/min.
- Duty cycle: intensive use.

Manufacturer documents

Manufacturer product page · FR

Manufacturer product page · EN

View the full product sheet | Request a quotation

SECTIONAL AND INDUSTRIAL DOORS

VN.M20

VN.M20 · Door operator



Manufacturer image associated with the VN.M20 product page.

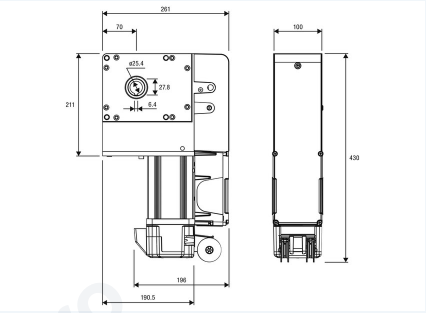

VN.M20 dimensional drawing published by Beninca.

Price on request

Industrial sectional door gear motor with manual chain operation.

- Door surface area: 35 □/max.
- Motor supply: 230 Vac.
- Power supply: 230 Vac (50-60Hz).
- Max torque: 130 Nm.
- Output speed: 24 r.p.m..
- Duty cycle: 30%.

Manufacturer documents

Manufacturer product page · FR

Manufacturer product page · EN

View the full product sheet | Request a quotation

Contents | Reference index | Request a quotation

SECTIONAL AND INDUSTRIAL DOORS

VN.S20 ESW

VN.S20 ESW · Door operator



Manufacturer image associated with the VN.S20 ESW product page.

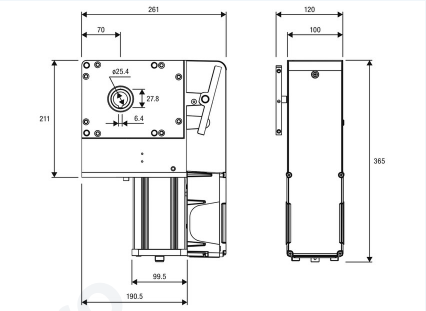

VN.S20 ESW dimensional drawing published by Beninca.

Price on request

Industrial sectional door gear motor with encoder and quick release.

- Door surface area: 35 □/max.
- Motor supply: 230 Vac.
- Power supply: 230 Vac (50-60Hz).
- Max torque: 130 Nm.
- Output speed: 24 r.p.m..
- Duty cycle: 30%.

ControlAccessPro

Manufacturer documents

Manufacturer product page · FR

Manufacturer product page · EN

View the full product sheet | Request a quotation

Contents | Reference index | Request a quotation

SECTIONAL AND INDUSTRIAL DOORS

VN.S20 UP

VN.S20 UP · industrial door operator with control unit



Manufacturer image of the model.

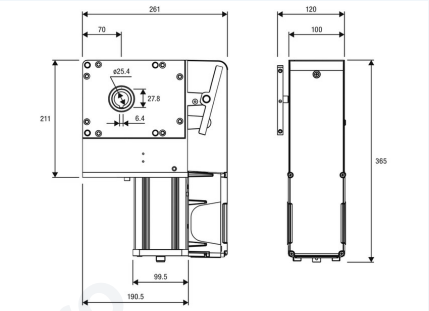

VN.S20 UP dimensional drawing published by Beninca.

Price on request

230 V operator for sectional and rolling doors with a control unit and quick release.

- Motor supply · 230 Vac
- Door area · 35 m² max.
- Maximum torque · 130 Nm
- Output speed · 24 rpm
- Output bore · 1” (25.4 mm)
- Duty cycle · 30%

Manufacturer documents

Official Beninca product page

Official Beninca product page

View the full product sheet | Request a quotation

RISING BARRIERS

DIVA.3

DIVA.3 · Automatic boom barrier



Manufacturer image associated with the DIVA.3 product page.

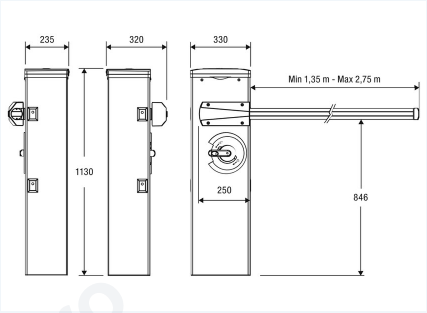

DIVA.3 dimensional drawing published by Beninca.

Price on request

Brushless barrier for a 3 m opening. Published opening time is 0.8 s at 80°.

- Passage width: 3.0 m.
- Motor supply: 24 Vdc BRUSHLESS 3PH.
- Power supply: 115 Vac / 230 Vac (50-60 Hz).
- Opening time: 0,8" (80°).
- Duty cycle: continuous use.
- Protection level: IP44 (control unit IP54).

Manufacturer documents

Manufacturer product page · FR

Manufacturer product page · EN

View the full product sheet | Request a quotation

RISING BARRIERS

DIVA.5

DIVA.5 · Automatic boom barrier

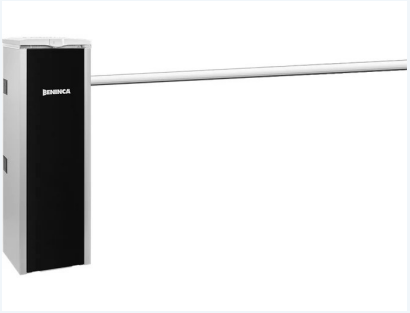

Manufacturer image associated with the DIVA.5 product page.

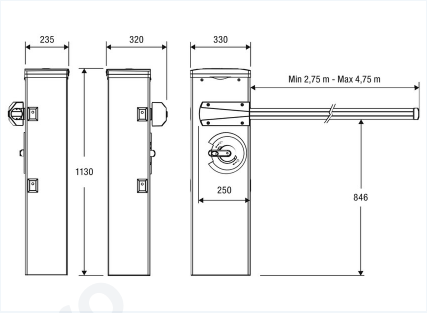

DIVA.5 dimensional drawing published by Beninca.

Price on request

Brushless barrier for a 5 m opening, designed for continuous-duty access.

- Passage width: 5,0 m.
- Motor supply: 24 Vdc BRUSHLESS 3PH.
- Power supply: 115 Vac / 230 Vac (50-60 Hz).
- Opening time: 2.5 s (80°).
- Duty cycle: continuous use.
- Protection level: IP44 (control unit IP54).

Manufacturer documents

Manufacturer product page · FR

Manufacturer product page · EN

View the full product sheet | Request a quotation

Contents | Reference index | Request a quotation

RISING BARRIERS

EVA.5

EVA.5 · rising barrier up to 5 m

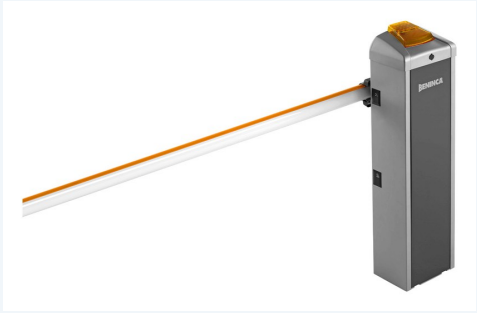

Manufacturer image of the model.

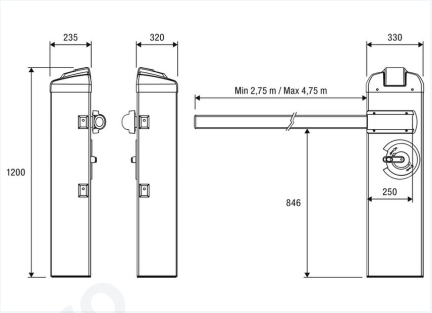

EVA.5 dimensional drawing published by Beninca.

€2,755.97 excl. VAT

Barrier for shared or industrial entrances with encoder and boom control.

- Motor supply · 24 Vdc
- Clear opening · 5.0 m
- Torque · 205 Nm
- Opening time · 3.5” ÷ 6”
- Duty cycle · intensive use
- Protection rating · IP44

ControlAccessPro

Manufacturer documents

Official Beninca product page

Official Beninca product page

View the full product sheet | Request a quotation

RISING BARRIERS

EVA.7

EVA.7 · rising barrier up to 7 m

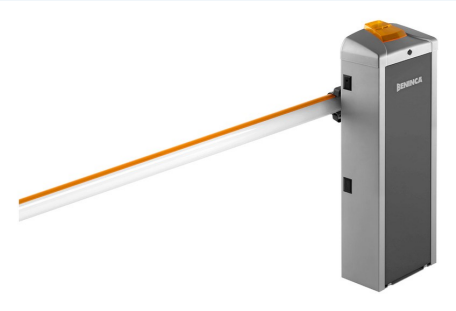

Manufacturer image of the model.

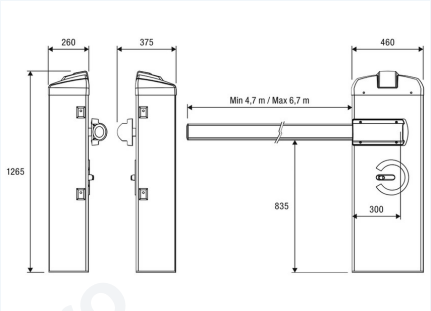

EVA.7 dimensional drawing published by Beninca.

Price on request

Wide-lane barrier with absolute encoder and optional signalling accessories.

- Motor supply · 24 Vdc
- Clear opening · 7.0 m
- Torque · 285 Nm
- Opening time · 3.5” ÷ 6”
- Duty cycle · intensive use
- Protection rating · IP44

ControlAccessPro

Manufacturer documents

Official Beninca product page

Official Beninca product page

View the full product sheet | Request a quotation

Contents | Reference index | Request a quotation

RISING BARRIERS

EVA.8

EVA.8 · Automatic boom barrier

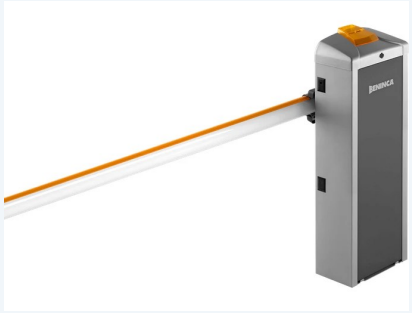

Manufacturer image associated with the EVA.8 product page.

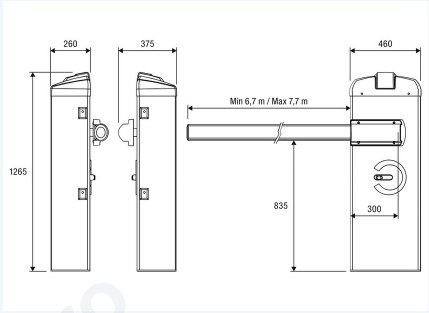

EVA.8 dimensional drawing published by Beninca.

Price on request

24 Vdc barrier for passages up to 8 m, with built-in controls, encoder and charger.

- Passage width: 8.0 m.
- Motor supply: 24 Vdc.
- Power supply: 100 ÷ 250 Vac (50-60Hz).
- Torque: 285 Nm.
- Opening time: 3.5” ÷ 6”.
- Duty cycle: intensive use.

ControlAccessPro

Manufacturer documents

Manufacturer product page · FR

Manufacturer product page · EN

View the full product sheet | Request a quotation

Contents | Reference index | Request a quotation

RISING BARRIERS

LADY

LADY · rising barrier up to 4 m



Manufacturer image of the model.

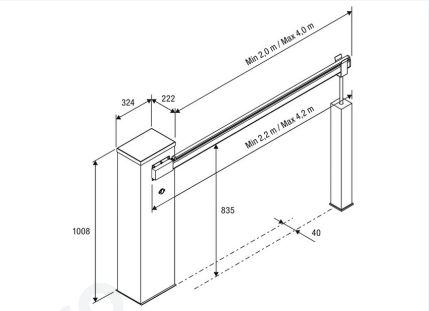

LADY dimensional drawing published by Beninca.

€2,042.78 excl. VAT

24 Vdc barrier for frequent operation, with integrated controller and charger.

- Motor supply · 24 Vdc
- Clear opening · 4.0 m
- Torque · 195 Nm
- Opening time · 3.5” ÷ 6”
- Duty cycle · intensive use
- Protection rating · IP44

ControlAccessPro

Manufacturer documents

Official Beninca product page

Official Beninca product page

View the full product sheet | Request a quotation

CONTROLS AND RADIO

BRAINY24 PLUS

BRAINY24 PLUS · Control unit



Manufacturer image associated with the BRAINY24 PLUS product page.

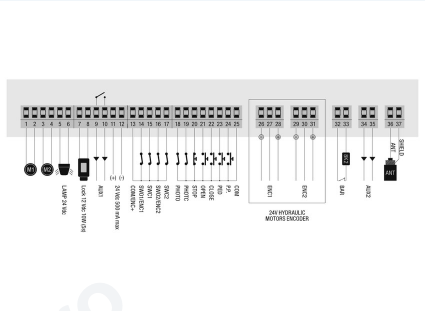

BRAINY24 PLUS terminal diagram published by Beninca.

Price on request

Controller for one or two 24 Vdc motors, with built-in receiver and charger.

- Control unit power supply: 115 or 230 Vac (selectable) 50/60Hz.
- Motor supply: 24 Vdc / 240 W + 240 W.
- N. memorisable codes: 64.

ControlAccessPro

Manufacturer documents

Manufacturer product page · FR

Manufacturer product page · EN

View the full product sheet | Request a quotation

Contents | Reference index | Request a quotation

CONTROLS AND RADIO

BRAINY PLUS

BRAINY PLUS · Control unit



Manufacturer image associated with the BRAINY PLUS product page.

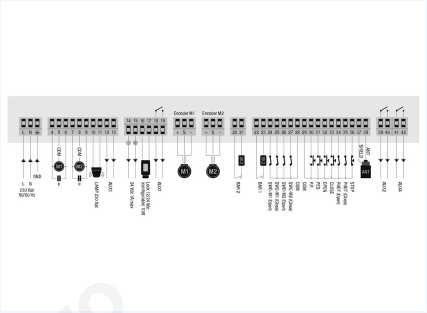

BRAINY PLUS terminal diagram published by Beninca.

Price on request

230 Vac control unit with an integrated receiver for one or two compatible motors.

- Control unit power supply: 230 Vac - 50/60 Hz.
- Motor supply: 230 Vac / 600 W + 600 W.
- N. memorisable codes: 512.

ControlAccessPro

Manufacturer documents

Manufacturer product page · FR

Manufacturer product page · EN

View the full product sheet | Request a quotation

CONTROLS AND RADIO

HEADY

HEADY · Control unit



Manufacturer image associated with the HEADY product page.

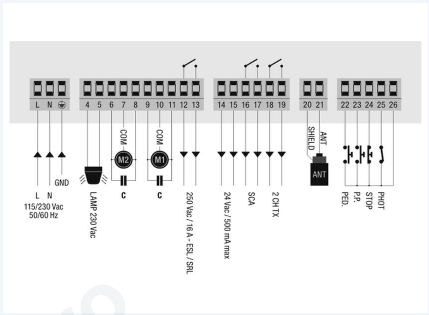

HEADY terminal diagram published by Beninca.

Price on request

230 Vac control unit with integrated receiver for one or two swing gate motors.

- Control unit power supply: 230 Vac - 50/60 Hz.
- Motor supply: 230 Vac / 500 W + 500 W.
- N. memorisable codes: 64.

ControlAccessPro

Manufacturer documents

Manufacturer product page · FR

Manufacturer product page · EN

View the full product sheet | Request a quotation

CONTROLS AND RADIO

IRI.TX4VA

IRI.TX4VA · Radio transmitter



Manufacturer image associated with the IRI.TX4VA product page.

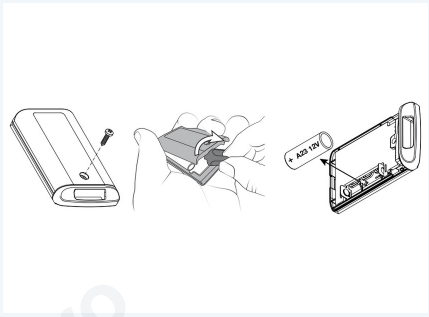

Replacing the IRI.TX remote battery, from the manufacturer guide.

Price on request

Four-channel 433.92 MHz keyring transmitter supporting ARC and Rolling Code.

- Frequency: 433.92 MHz.
- Channels: 4.
- ARC and Rolling Code coding.

ControlAccessPro

Manufacturer documents

Manufacturer product page · FR

Manufacturer product page · EN

Radio programming guide · FR

Radio programming guide · EN

View the full product sheet | Request a quotation

Contents | Reference index | Request a quotation

CONTROLS AND RADIO

ONE.2WB

ONE.2WB · Radio receiver



Manufacturer image associated with the ONE.2WB product page.

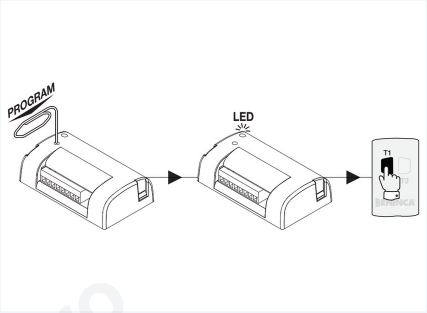

Radio programming diagram for ONE.2WB receiver, from the manufacturer guide.

Price on request

Two-channel boxed radio receiver with 512 code slots and three coding modes.

- Power supply: 12 ÷ 28 Vdc | 21 ÷ 28 Vac.
- Frequency: 433,92 MHz.
- Channels: 2.
- N. memorisable codes: 512.
- ARC, Rolling Code and fixed code coding.

ControlAccessPro

Manufacturer documents

Manufacturer product page · FR

Manufacturer product page · EN

Radio programming guide · FR

Radio programming guide · EN

View the full product sheet | Request a quotation

Contents | Reference index | Request a quotation

CONTROLS AND RADIO

TO.GO2VA

TO.GO2VA · two-channel transmitter



Manufacturer image of the model.

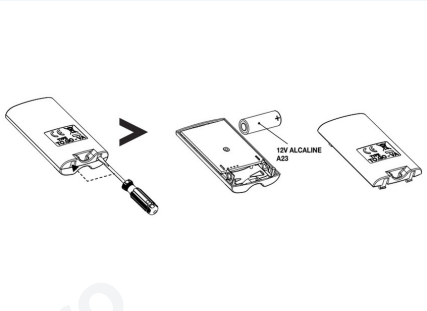

Replacing the TO.GO remote battery, from the manufacturer guide.

€39.20 excl. VAT

Two-channel gate transmitter supporting ARC and Rolling Code protocols.

- Channels · 2
- Frequency · 433.92 MHz

ControlAccessPro

Manufacturer documents

Official Beninca product page

Radio programming and user guide

Official Beninca product page

Radio programming and user guide

View the full product sheet | Request a quotation

CONTROLS AND RADIO

TO.GO4VA

TO.GO4VA · Radio transmitter



Manufacturer image associated with the TO.GO4VA product page.

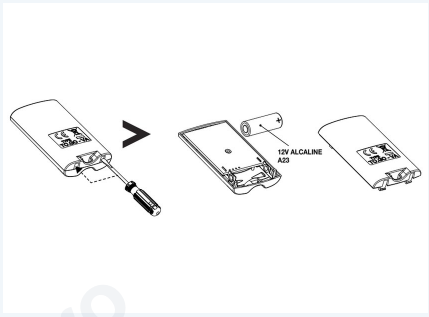

Replacing the TO.GO remote battery, from the manufacturer guide.

Price on request

Four-channel 433.92 MHz transmitter supporting ARC and Rolling Code.

- Frequency: 433.92 MHz.
- Channels: 4.
- ARC and Rolling Code coding.

ControlAccessPro

Manufacturer documents

Manufacturer product page · FR

Manufacturer product page · EN

Radio programming guide · FR

Radio programming guide · EN

Control Access Distribution · 326 avenue de la Rasclave · 13821 La Penne-sur-Huveaune · France
cad@controlaccessdistri.com +33 4 91 18 82 68 controlaccesspro.com

Indicative public prices excl. VAT. Contact us. Manufacturer illustrations.