Contents | Reference index | Request a quotation

PROFESSIONAL SELECTION 2027 / 2028

GfA ELEKTROMATEN

Industrial door drives and controls

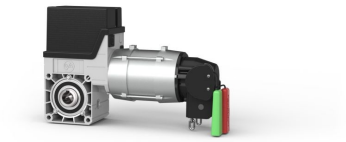

SE 5.24

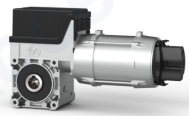

SI 8.20



TS 959

27 selected references and configurations for the European market.

Clickable contents, manufacturer resources and quotation links.

Choose a product family | Plan my project

Control Access Distribution

Control Access Distribution · 326 avenue de la Rasclave · 13821 La Penne-sur-Huveaune · France
cad@controlaccessdistri.com +33 4 91 18 82 68 controlaccesspro.com

Price and availability on request. Manufacturer images.

Contents | Reference index | Request a quotation

Contents

Choose by installation p. 3
Reference index p. 4
SE sectional door drives p. 5
SI and ST door drives p. 14
TS and WS door controls p. 18
New TS-C generation p. 25
Diagnostics and accessories p. 30
TS-C controls and replacement p. 32
Prepare a quotation and view sources p. 33

Each line opens its chapter. The Contents button remains available on every page.

Control Access Distribution

Contents | Reference index | Request a quotation

Choose by installation

Counterbalanced sectional door

Choose an SE by output torque, bore, speed, duty and emergency operation.

View selection

Roller shutter or unbalanced door

Check the load, barrel and arrest torque. The SI range incorporates a safety brake in the gearbox.

View selection

High-cycle door

Record cycles per hour and target speeds. Check DU, FI or FX variants, the controller and safety equipment.

View selection

Controller and limit switches

Identify DES digital or NES cam limit switches. Check supply, neutral, cable and connected devices.

View selection

Potentially explosive atmosphere

Define the zone and site requirements. Select the drive, control and marking for the configuration.

View GfA variants

TS-A or TS-B replacement

Compare functions before replacing a unit. Order the TS-C controller and its connection kit separately.

View selection

Control Access Distribution

Contents | Reference index | Request a quotation

Reference index

GfA-Stick	p. 30	TS 91.11	p. 25
SE 14.100 FI	p. 13	TS 92.12	p. 26
SE 14.15	p. 9	TS 93.13	p. 27
SE 14.21	p. 10	TS 93.25	p. 28
SE 14.21 WS	p. 11	TS 959	p. 18
SE 5.24	p. 5	TS 96.25	p. 29
SE 6.65 DU ER	p. 12	TS 970	p. 19
SE 9.24	p. 6	TS 971	p. 20
SE 9.24 ER	p. 7	TS 971 raccordement direct	p. 21
SE 9.24 WS ER	p. 8	TS 971+	p. 22
SI 14.15	p. 15	TS 981	p. 23
SI 140.7	p. 16	WS 900	p. 24
SI 8.20	p. 14	WSD	p. 31
ST 9.24	p. 17		

Control Access Distribution

Click an ordering reference to open its product sheet.

Contents | Reference index | Request a quotation

SE sectional door drives

GfA ELEKTROMATEN / SE 5.24 · No. 10003375.10012

SE 5.24 · SK / DES

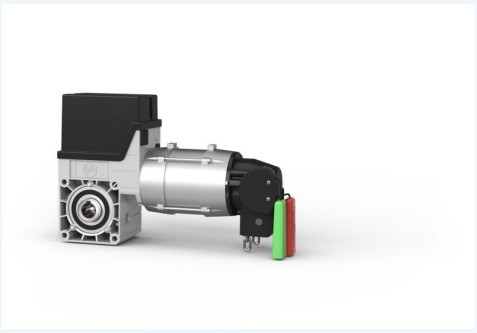

Direct-fit drive for a counterbalanced sectional door.

- Output torque 50 Nm, speed 24 rpm.
- Hollow shaft Ø 25.4 mm. Three-phase supply.
- SK rapid hand chain and DES digital limit switch variant.

GfA manufacturer image. Configuration shown.

Drive unit only. Confirm the control panel, cables, installation and door compatibility.

Price on request

Confirm configuration and pricing in your quotation.

GfA in French | GfA in English | GfA documentation | Request a quotation

Control Access Distribution

Contents | Reference index | Request a quotation

SE sectional door drives

GfA ELEKTROMATEN / SE 9.24 · No. 10002188.10012

SE 9.24 · SK / DES

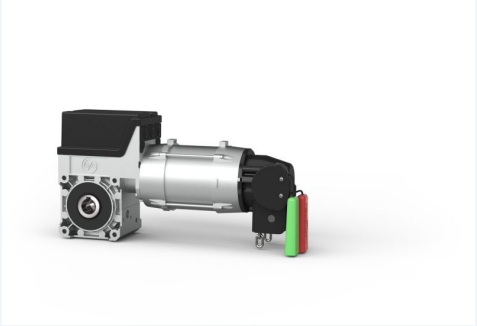

Direct-fit drive for a counterbalanced sectional door.

- Output torque 90 Nm, speed 24 rpm.
- Hollow shaft Ø 25.4 mm. 3N~ 400 V.
- SK rapid hand chain and DES limit switch. IP65 per manual.
- 12 cycles/h, or 8.3 per EN 60335-2-103, under manual conditions.

GfA manufacturer image. Configuration shown.

Control Access Distribution

Drive unit only. Confirm the control panel, cables, installation and door compatibility.

Price on request

Confirm configuration and pricing in your quotation.

GfA in French | GfA in English | GfA documentation | Request a quotation

Contents | Reference index | Request a quotation

SE sectional door drives

GfA ELEKTROMATEN / SE 9.24 ER · No. 10002748.10011

SE 9.24 ER



GfA manufacturer image. Configuration shown.

Direct-fit drive for a counterbalanced sectional door.

- Output torque 90 Nm, speed 24 rpm.
- Hollow shaft Ø 25.4 mm. Three-phase supply.
- ER gearbox release. Confirm the limit switch variant.

Drive unit only. Confirm the control panel, cables, installation and door compatibility.

Price on request

Confirm configuration and pricing in your quotation.

GfA in French | GfA in English | GfA documentation | Request a quotation

Control Access Distribution

Contents | Reference index | Request a quotation

SE sectional door drives

GfA ELEKTROMATEN / SE 9.24 WS ER · No. 10002763.10011

SE 9.24 WS ER



Direct-fit drive for a counterbalanced sectional door.

- Output torque 90 Nm, speed 24 rpm.
- Hollow shaft Ø 25.4 mm. 1N~ 230 V.
- ER gearbox release. Confirm the limit switch variant.

GfA manufacturer image. Configuration shown.

Control Access Distribution

Drive unit only. Confirm the control panel, cables, installation and door compatibility.

Price on request

Confirm configuration and pricing in your quotation.

GfA in French | GfA in English | GfA documentation | Request a quotation

Contents | Reference index | Request a quotation

SE sectional door drives

GfA ELEKTROMATEN / SE 14.15 · No. 10002516.10012

SE 14.15 · SK / DES

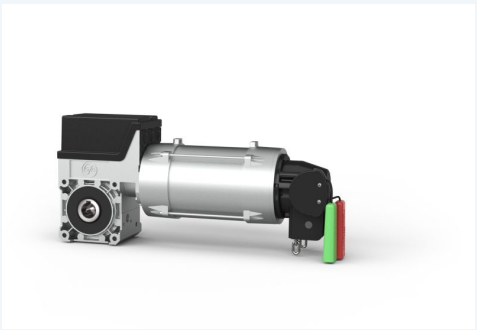

Direct-fit drive for a counterbalanced sectional door.

- Output torque 140 Nm, speed 15 rpm.
- Hollow shaft Ø 25.4 mm. Three-phase supply.
- SK rapid hand chain and DES limit switch variant.

GfA manufacturer image. Configuration shown.

Drive unit only. Confirm the control panel, cables, installation and door compatibility.

Price on request

Confirm configuration and pricing in your quotation.

GfA in French | GfA in English | GfA documentation | Request a quotation

Control Access Distribution

Contents | Reference index | Request a quotation

SE sectional door drives

GfA ELEKTROMATEN / SE 14.21 · No. 10002204.10012

SE 14.21 · SK / DES

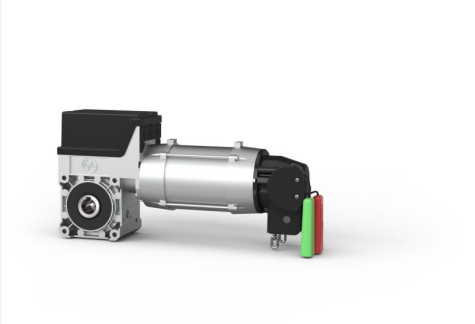

Direct-fit drive for a counterbalanced sectional door.

- Output torque 140 Nm, speed 21 rpm.
- Hollow shaft Ø 25.4 mm. 3~ 400 V.
- SK rapid hand chain and DES limit switch. IP65 per manual.
- 8 cycles/h, or 2.1 per EN 60335-2-103, under manual conditions.

GfA manufacturer image. Configuration shown.

Control Access Distribution

Drive unit only. Confirm the control panel, cables, installation and door compatibility.

Price on request

Confirm configuration and pricing in your quotation.

GfA in French | GfA in English | GfA documentation | Request a quotation

Contents | Reference index | Request a quotation

SE sectional door drives

GfA ELEKTROMATEN / SE 14.21 WS

SE 14.21 WS



Direct-fit drive for a counterbalanced sectional door.

- Output torque 140 Nm, speed 21 rpm.
- Hollow shaft Ø 25.4 / 31.75 mm. 1N~ 230 V.
- DES or NES limits and SK or NHK emergency operation, depending on variant.

GfA manufacturer image. Configuration shown.

Control Access Distribution

Model to configure. State voltage, shaft bore, limit switch and emergency operation.

Price on request

Confirm configuration and pricing in your quotation.

GfA in French | GfA in English | GfA documentation | Request a quotation

Contents | Reference index | Request a quotation

SE sectional door drives

GfA ELEKTROMATEN / SE 6.65 DU ER · No. 10003346.10011

SE 6.65 DU ER



Drive for a counterbalanced sectional door with DU direct converter.

- 60 Nm, variable opening speed of 20 to 65 rpm.
- Ø 25.4 mm hollow shaft. 3~ 400 V supply.
- DES digital limit switch and ER gearbox release.

GfA manufacturer image. Configuration shown.

Control Access Distribution

Drive unit only. Confirm the control panel, cables, installation and door compatibility.

Price on request

Confirm configuration and pricing in your quotation.

GfA in French | GfA in English | GfA documentation | Request a quotation

Contents | Reference index | Request a quotation

SE sectional door drives

GfA ELEKTROMATEN / SE 14.100 FI · No. 10004010.10012

SE 14.100 FI · SK



GfA manufacturer image. Configuration shown.

Sectional door drive with an integrated frequency inverter and soft starting.

- 140 Nm. Ø 25.4 mm hollow shaft. SK rapid hand chain and DES limits.
- Opening up to 100 rpm, depending on setting and installation.
- Closing up to 60 rpm only above 2.5 m with non-contact safeguards.

Control Access Distribution

The same item number was used for SE 14.80 FI. Confirm the supplied generation and settings.

Price on request

Confirm configuration and pricing in your quotation.

GfA in French | GfA in English | GfA documentation | Request a quotation

Contents | Reference index | Request a quotation

SI and ST door drives

GfA ELEKTROMATEN / SI 8.20

SI 8.20 · integrated safety brake

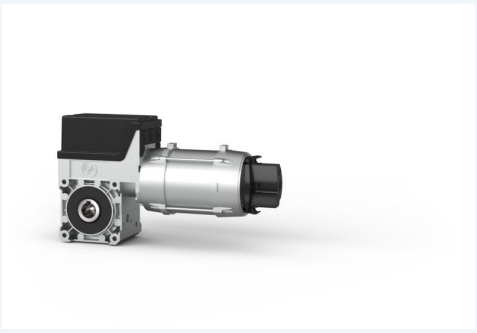

Drive for industrial doors whose installation requires anti-fallback protection.

• 80 Nm, 20 rpm. Ø 25 / 25.4 / 30 mm hollow shaft.

• DES or NES limits. SK or NHK emergency operation, depending on variant.

GfA manufacturer image. Configuration shown.

Model to configure. State voltage, shaft bore, limit switch and emergency operation.

Price on request

Confirm configuration and pricing in your quotation.

GfA in French | GfA in English | GfA documentation | Request a quotation

Control Access Distribution

Contents | Reference index | Request a quotation

SI and ST door drives

GfA ELEKTROMATEN / SI 14.15

SI 14.15 · integrated safety brake

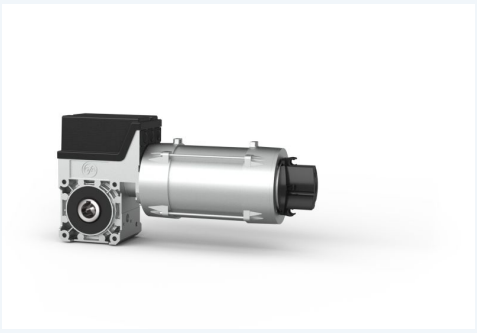

GfA manufacturer image. Configuration shown.

Drive for industrial doors whose installation requires anti-fallback protection.

• 140 Nm, 15 rpm. Ø 25 / 25.4 / 30 mm hollow shaft.

• DES or NES limits. NHK or KNH emergency operation, depending on variant.

Control Access Distribution

Model to configure. State voltage, shaft bore, limit switch and emergency operation.

Price on request

Confirm configuration and pricing in your quotation.

GfA in French | GfA in English | GfA documentation | Request a quotation

Contents | Reference index | Request a quotation

SI and ST door drives

GfA ELEKTROMATEN / SI 140.7

SI 140.7 · integrated safety brake

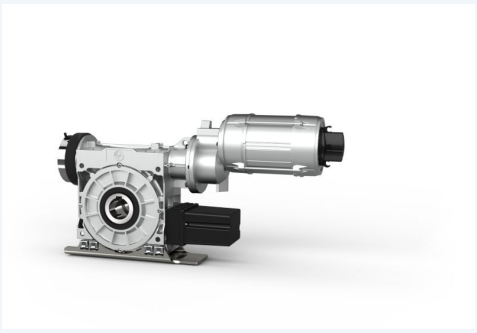

GfA manufacturer image. Configuration shown.

Drive for industrial doors whose installation requires anti-fallback protection.

• 1400 Nm, 7 rpm. Ø 55 mm hollow shaft.

• High-torque drive. DES or NES limits, NHK or KNH emergency operation.

Control Access Distribution

Model to configure. State voltage, shaft bore, limit switch and emergency operation.

Price on request

Confirm configuration and pricing in your quotation.

GfA in French | GfA in English | GfA documentation | Request a quotation

Contents | Reference index | Request a quotation

SI and ST door drives

GfA ELEKTROMATEN / ST 9.24

ST 9.24 · sliding door

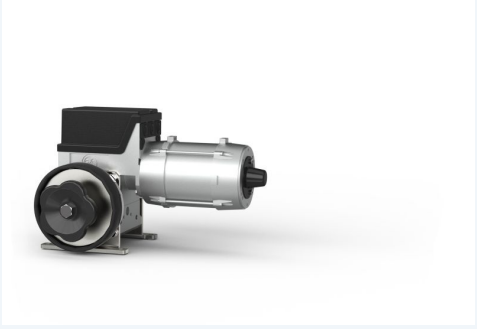

GfA manufacturer image. Configuration shown.

Drive specifically designed for industrial sliding doors.

- 90 Nm, 24 rpm, Ø 25 mm output shaft.
- Depending on configuration, no limit switch or DES/NES limits.
- NHK or SK manual emergency options.

Control Access Distribution

Model to configure. State voltage, shaft bore, limit switch and emergency operation.

Price on request

Confirm configuration and pricing in your quotation.

GfA in French | GfA in English | GfA documentation | Request a quotation

Contents | Reference index | Request a quotation

TS and WS door controls

GfA ELEKTROMATEN / TS 959 · No. 20095900.00002

TS 959 · hold-to-run control panel



TS 959 / 970 / 971 range enclosure, GfA illustration.

Hold-to-run control panel for a GfA drive.

- CEE 3N~ 400 V, 5-pole supply variant.
- For DES or NES limit switches.
- Standard housing 155 × 386 × 90 mm.

Control Access Distribution

Control panel only, without drive. Check wiring, software version and door safety devices.

Price on request

Confirm configuration and pricing in your quotation.

GfA in French | GfA in English | GfA documentation | Request a quotation

Contents | Reference index | Request a quotation

TS and WS door controls

GfA ELEKTROMATEN / TS 970 · No. 20197000.00002

TS 970 · automatic control panel



TS 959 / 970 / 971 range enclosure, GfA illustration.

GfA door control with automatic mode subject to the installed safety devices.

- CEE 3N~ 400 V, 5-pole variant.
- DES or NES limits, 1 UBS connection and 1 relay contact.
- 24 V / 180 mA for external devices.

Control Access Distribution

Control panel only, without drive. Check wiring, software version and door safety devices.

Price on request

Confirm configuration and pricing in your quotation.

GfA in French | GfA in English | GfA documentation | Request a quotation

Contents | Reference index | Request a quotation

TS and WS door controls

GfA ELEKTROMATEN / TS 971 · No. 20097100.00002

TS 971 · 350 mA control panel



TS 959 / 970 / 971 range enclosure, GfA illustration.

Automatic door controller for GfA-driven doors.

- CEE 3N~ 400 V, 5-pole variant. 24 V / 350 mA for external devices.
- DES or NES limits. 1 UBS connection and 2 relay contacts.
- Standard housing 155 × 386 × 90 mm.

Control Access Distribution

350 mA variant. Check WSD compatibility and connection type before replacement.

Price on request

Confirm configuration and pricing in your quotation.

GfA in French | GfA in English | GfA documentation | Request a quotation

Contents | Reference index | Request a quotation

TS and WS door controls

GfA ELEKTROMATEN / TS 971 raccordement direct · No. 20097100.00001

TS 971 · hardwired mains



TS 959 / 970 / 971 range enclosure, GfA illustration.

TS 971 replacement version with mains terminal and cable gland.

- 24 V / 350 mA for external devices.
- Automatic control for DES or NES limits.
- 1 UBS connection and 2 relay contacts.

Hardwired version, distinct from the CEE plug variant.

Price on request

Confirm configuration and pricing in your quotation.

GfA in French | GfA in English | GfA documentation | Request a quotation

Control Access Distribution

Contents | Reference index | Request a quotation

TS and WS door controls

GfA ELEKTROMATEN / TS 971+ · No. 20197100.30002

TS 971+ · 1,000 mA control panel



Shared TS 971 / TS 971+ enclosure, GfA illustration.

Variant with greater auxiliary power capacity for compatible accessories.

- CEE 3N~ 400 V, 5-pole variant. 24 V / 1,000 mA for external devices.
- DES or NES limits. 1 UBS connection and 2 relay contacts.
- Standard housing 155 × 386 × 90 mm.

Control Access Distribution

Confirm the full part number. Pricing for the 350 mA TS 971 does not apply.

Price on request

Confirm configuration and pricing in your quotation.

GfA in French | GfA in English | GfA documentation | Request a quotation

Contents | Reference index | Request a quotation

TS and WS door controls

GfA ELEKTROMATEN / TS 981

TS 981 · enhanced control functions



GfA manufacturer image. Configuration shown.

Control panel for installations requiring multiple interfaces and digital limits.

- 3N~ 400 V, 50/60 Hz, auxiliary supply 24 V / 1,000 mA.
- DES limits, 5 UBS connections and 2 relay contacts.
- Standard housing 190 × 300 × 115 mm.

Control panel only, without drive. Check wiring, software version and door safety devices.

Control Access Distribution

Price on request

Confirm configuration and pricing in your quotation.

GfA in French | GfA in English | GfA documentation | Request a quotation

Contents | Reference index | Request a quotation

TS and WS door controls

GfA ELEKTROMATEN / WS 900

WS 900 · three reversing contactors



GfA three-contactor version pictured.

Reversing contactor control for drives with an NES mechanical limit switch.

- Three 24 V contactors. 24 V AC control voltage.
- 24 V / 1,000 mA for external devices per data sheet.
- Housing 145 × 101 × 209 mm.

Control Access Distribution

Control panel only, without drive. Check wiring, software version and door safety devices.

Price on request

Confirm configuration and pricing in your quotation.

GfA in French | GfA in English | GfA documentation | Request a quotation

Contents | Reference index | Request a quotation

New TS-C generation

GfA ELEKTROMATEN / TS 91.11 · No. 20910110

TS 91.11 · hold-to-run control



GfA manufacturer image. Configuration shown.

New TS-C generation, positioned by GfA alongside the TS 959.

- Hold-to-run closing. No safety edge or light curtain input.
- 1 potential-free relay contact. WLAN. IP65 housing per TI 178.
- 1N~ / 3~ 190-240 V or 3N~ 360-415 V supply, depending on wiring.

Neutral is required on a 400 V three-phase supply. Separate mains kit and optional NES adapter.

Price on request

Confirm configuration and pricing in your quotation.

GfA in French | GfA in English | GfA documentation | Request a quotation

Control Access Distribution

Contents | Reference index | Request a quotation

New TS-C generation

GfA ELEKTROMATEN / TS 92.12 · No. 20920120

TS 92.12 · automatic control



TS-C range enclosure, GfA illustration.

TS-C model comparable to the TS 970.

- Safety edge and light curtain connections per manual.
- 24 V / 180 mA for external devices. 1 relay contact.
- Built-in WLAN. No integrated WSD radio receiver.

Control Access Distribution

Order the mains connection kit separately. NES requires an optional adapter. Confirm configuration and availability.

Price on request

Confirm configuration and pricing in your quotation.

GfA in French | GfA in English | GfA documentation | Request a quotation

Contents | Reference index | Request a quotation

New TS-C generation

GfA ELEKTROMATEN / TS 93.13 · No. 20930130

TS 93.13 · 350 mA



GfA illustration shared by several variants.

TS-C control panel with built-in command radio.

• 24 V / 350 mA for external devices. 1 DIF interface and 2 relay contacts.

• Safety edge and light curtain connections. No integrated WSD receiver.

• Built-in WLAN, optional LTE-NB modem depending on configuration.

Control Access Distribution

Order the mains connection kit separately. NES requires an optional adapter. Confirm configuration and availability.

Price on request

Confirm configuration and pricing in your quotation.

GfA in French | GfA in English | GfA documentation | Request a quotation

Contents | Reference index | Request a quotation

New TS-C generation

GfA ELEKTROMATEN / TS 93.25 · No. 20930250

TS 93.25 · 1 A with WSD



TS-C range enclosure, GfA illustration.

TS-C control with an integrated WSD receiver for a compatible door module.

- 24 V / 1 A for external devices. 1 DIF interface and 2 relay contacts.
- Integrated command radio and WSD receiver. Check the module and sensors.
- Built-in WLAN, optional LTE-NB modem depending on configuration.

Control Access Distribution

Order the mains connection kit separately. NES requires an optional adapter. Confirm configuration and availability.

Price on request

Confirm configuration and pricing in your quotation.

GfA in French | GfA in English | GfA documentation | Request a quotation

Contents | Reference index | Request a quotation

New TS-C generation

GfA ELEKTROMATEN / TS 96.25 · No. 20960250

TS 96.25 · traffic control



GfA manufacturer image. Configuration shown.

TS-C control with alternating traffic management and integrated WSD reception.

- 24 V / 1 A for external devices. 3 DIF interfaces.
- 2 relay contacts plus 4 for traffic signals, depending on configuration.
- Safety inputs and WLAN as specified in the manual. Optional LTE-NB modem.

Control Access Distribution

Order the mains connection kit separately. NES requires an optional adapter. Confirm configuration and availability.

Price on request

Confirm configuration and pricing in your quotation.

GfA in French | GfA in English | GfA documentation | Request a quotation

Contents | Reference index | Request a quotation

Diagnostics and accessories

GfA ELEKTROMATEN / GfA-Stick · No. 20003696

GfA-Stick · diagnostics

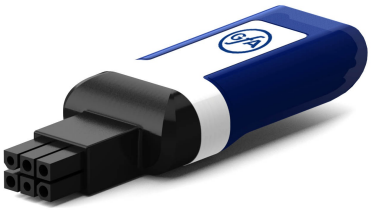

GfA manufacturer image. Configuration shown.

Bluetooth adapter for reading data from compatible control panels.

- evodo Stick app on a Bluetooth 4.0 mobile device.
- Published compatibility with TS 959, TS 970, TS 971/971+ and selected XL variants.
- Data transfer and tracking available through the evodo platform.

Diagnostic accessory. Check control and app compatibility.

Price on request

Confirm configuration and pricing in your quotation.

GfA in French | GfA in English | GfA documentation | Request a quotation

Control Access Distribution

Contents | Reference index | Request a quotation

Diagnostics and accessories

GfA ELEKTROMATEN / WSD · No. 30005154

WSD · wireless door module

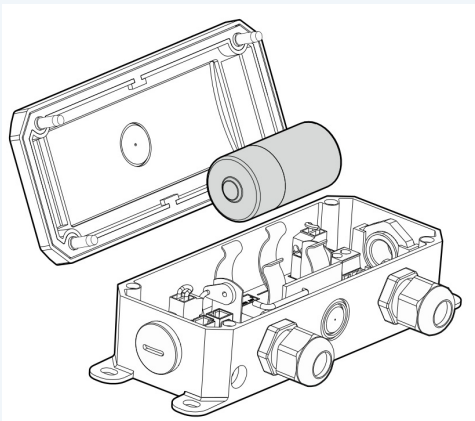

GfA technical drawing of module 30005154.

Wireless transmission module between door sensors and a compatible control panel.

- 2.4 GHz radio. Variant 30005154 with battery and IP65 housing.
- Connect the safety edge, wicket-door contact and other sensors as supported by the variant.
- Integrated WSD receiver on TS 93.25, TS 95.25 and TS 96.25.

Control Access Distribution

Module only. Check sensor compatibility and installation conditions.

Price on request

Confirm configuration and pricing in your quotation.

GfA in French | GfA in English | GfA documentation | Request a quotation

TS-C door controls

GfA compares the following models with earlier generations. Check wiring and required functions before ordering.

TS-C	Comparable	Check
TS 91.11	TS 959	Check the supply neutral.
TS 92.12	TS 970	Automatic control and safety inputs.
TS 93.13	TS 971	Control radio. No WSD receiver.
TS 93.25	TS 971	Control radio and WSD receiver.
TS 95.25	TS 981	WSD. No two-way traffic control.
TS 96.25	TS 981	WSD and traffic control subject to configuration.

Order the mains connection kit separately and the NES cable adapter where required. Check software version and availability.

For earlier TS controllers, include the full reference and connection method in your request.

GfA technical information FR | GfA technical information EN

Contents | Reference index | Request a quotation

Prepare your quotation

1. Identify the door

State type, size, counterbalance, shaft diameter, load, speed and cycles per hour. Attach the rating plate and drawing if available.

2. Specify the equipment

State voltage, phases and neutral, DES or NES, emergency operation, safety devices and existing control. Specify cables, options and quantity.

3. Confirm the price excluding VAT

Your ControlAccessPro quotation specifies the price excluding VAT, availability, delivery and installation.

Control Access Distribution

GfA ELEKTROMATEN resources

European catalogue FR | European catalogue EN

Door controls | Manufacturer contact

Sizing and protective equipment depend on the complete door. Confirm the supplied items in your quotation.

Ask ControlAccessPro for a quotation

Control Access Distribution · 326 avenue de la Rasclave · 13821 La Penne-sur-Huveaune · France

cad@controlaccessdistri.com +33 4 91 18 82 68 controlaccesspro.com

Price and availability on request. Manufacturer images.